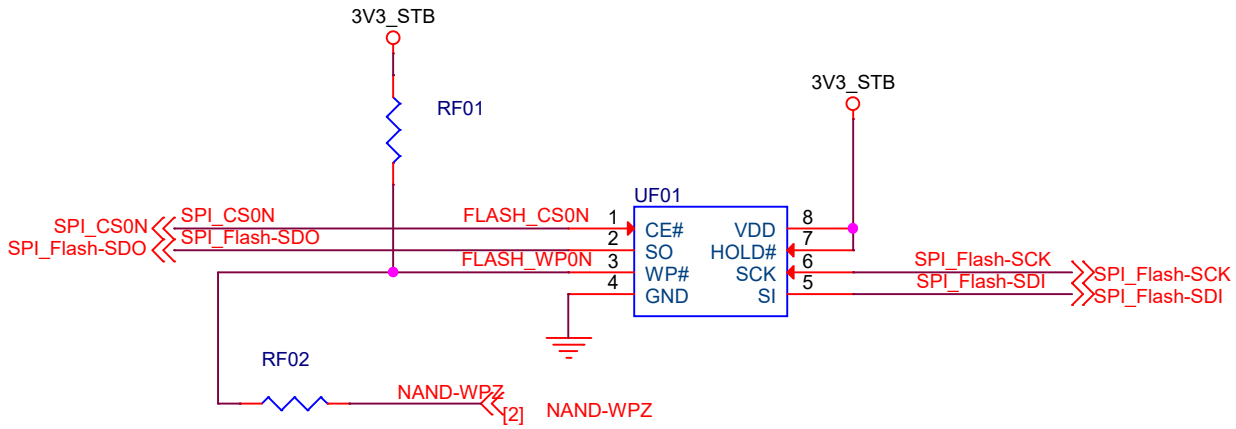
3V3_STB
RF01
3V3_STB
UF01
SPI_CS0N
SPI_Flash-SDO
SPI_CS0N
SPI_Flash-SDO
FLASH_CS0N
FLASH_WP0N
1
2
3
4
CE#
SO
WP#
GND
VDD
HOLD#
SCK
SI
8
7
6
5
SPI_Flash-SCK
SPI_Flash-SDI
SPI_Flash-SCK
SPI_Flash-SDI
RF02
NAND-WPZ
[2]
NAND-WPZ

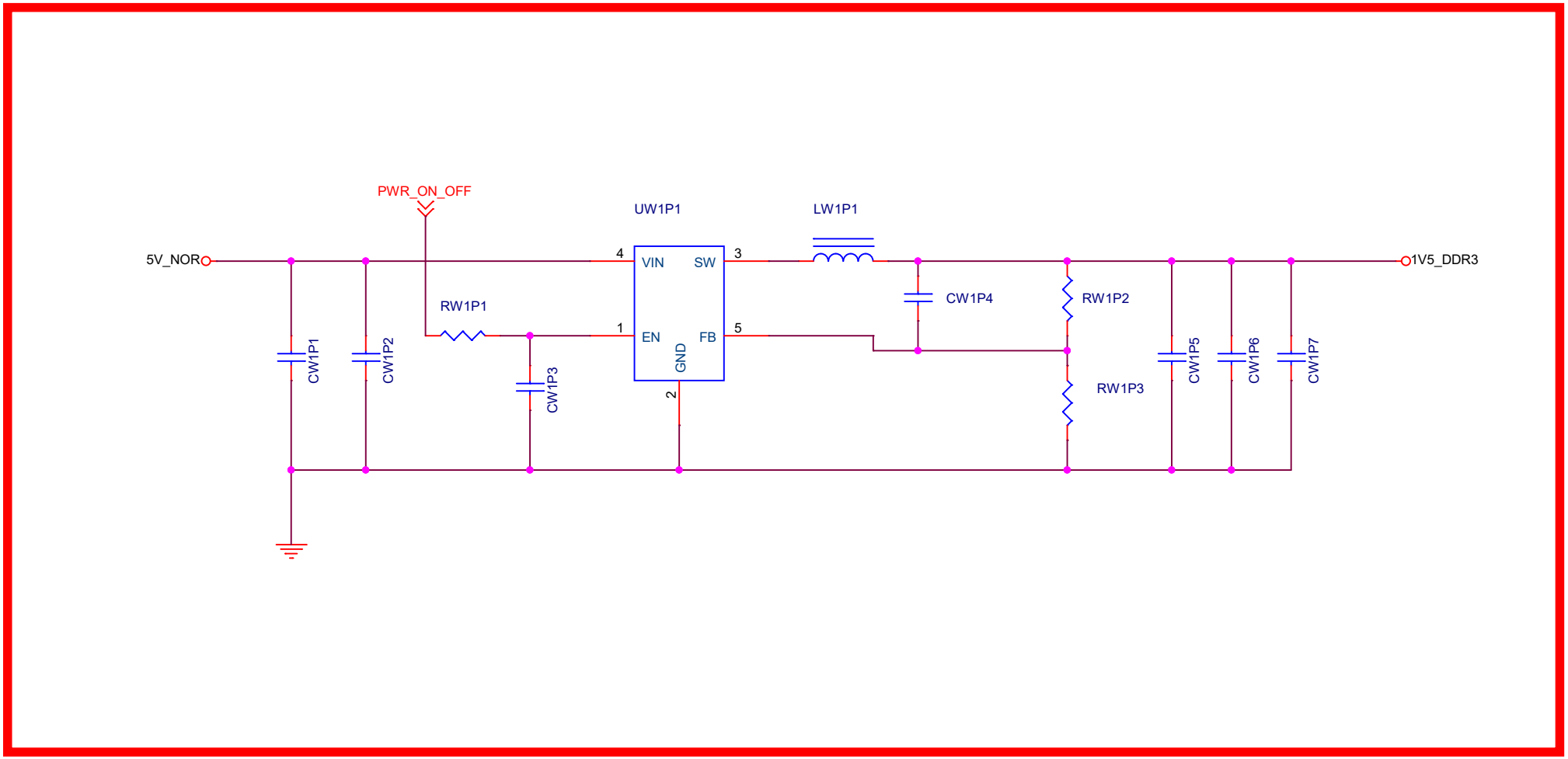
PWR_ON_OFF
UW1P1
LW1P1
5V_NOR
4
VIN
SW
3
1V5_DDR3
CW1P4
RW1P2
RW1P1
1
EN
FB
5
GND
2
CW1P1
CW1P2
CW1P3
RW1P3
CW1P5
CW1P6
CW1P7

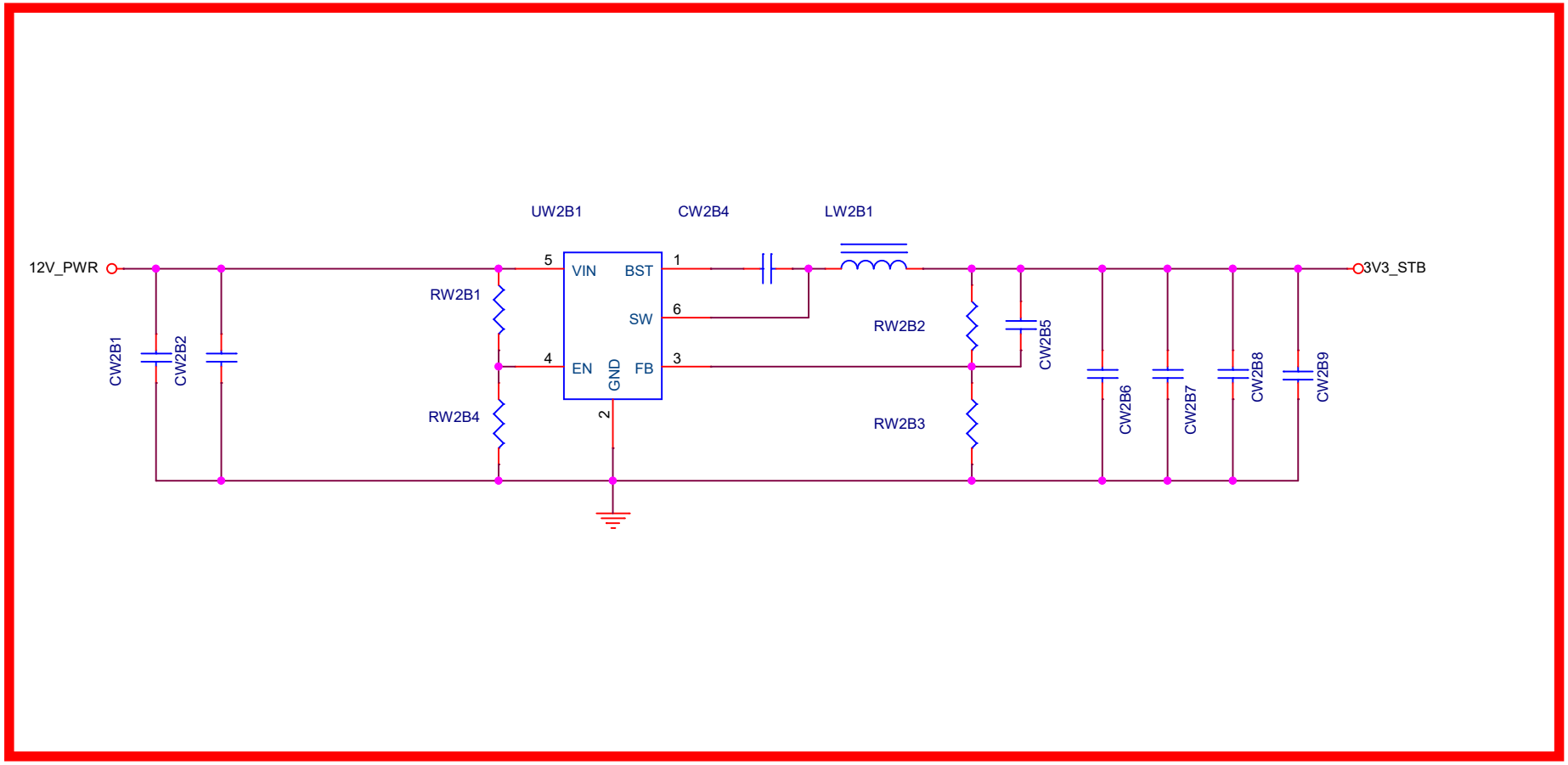
UW2B1
CW2B4
LW2B1
12V_PWR
3V3_STB
VIN
BST
SW
EN
GND
FB
5
1
6
4
3
2
RW2B1
RW2B4
RW2B2
RW2B3
CW2B1
CW2B2
CW2B5
CW2B6
CW2B7
CW2B8
CW2B9

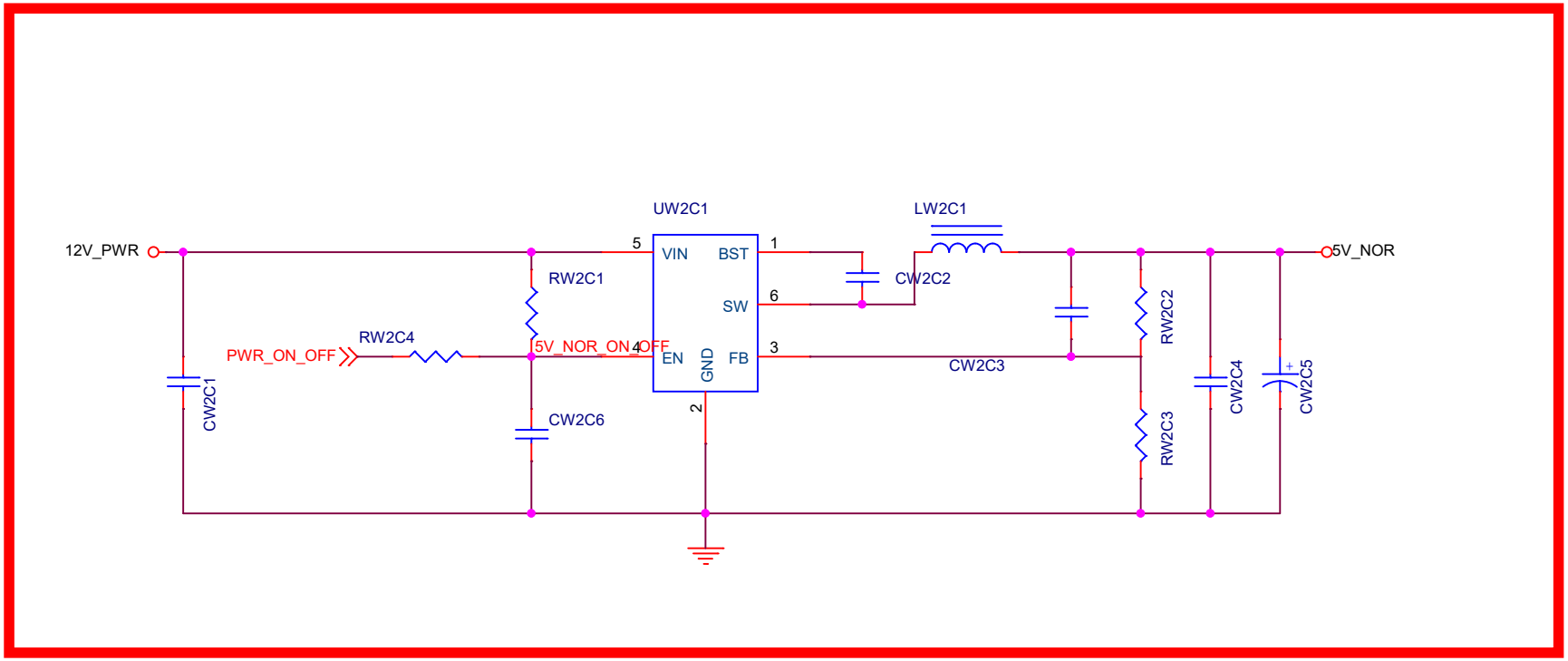
UW2C1
LW2C1
12V_PWR
5
VIN
BST
1
5V_NOR
RW2C1
CW2C2
SW
6
RW2C2
RW2C4
PWR_ON_OFF
5V_NOR_ON_OFF
4
EN
GND
FB
3
CW2C3
CW2C1
CW2C6
2
RW2C3
CW2C4
CW2C5

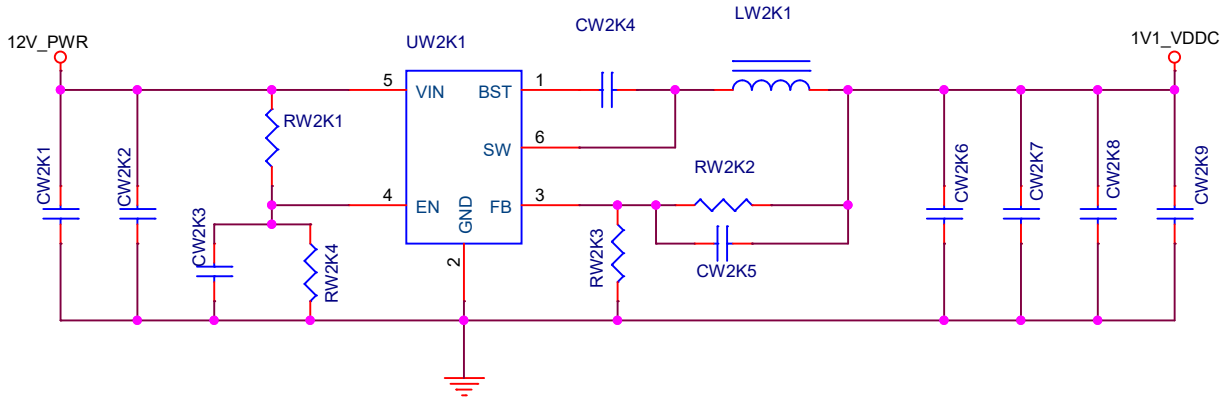
12V_PWR
UW2K1
CW2K4
LW2K1
1V1_VDDC
VIN
BST
SW
EN
GND
FB
5
1
6
4
3
2
RW2K1
RW2K2
RW2K3
RW2K4
CW2K1
CW2K2
CW2K3
CW2K5
CW2K6
CW2K7
CW2K8
CW2K9

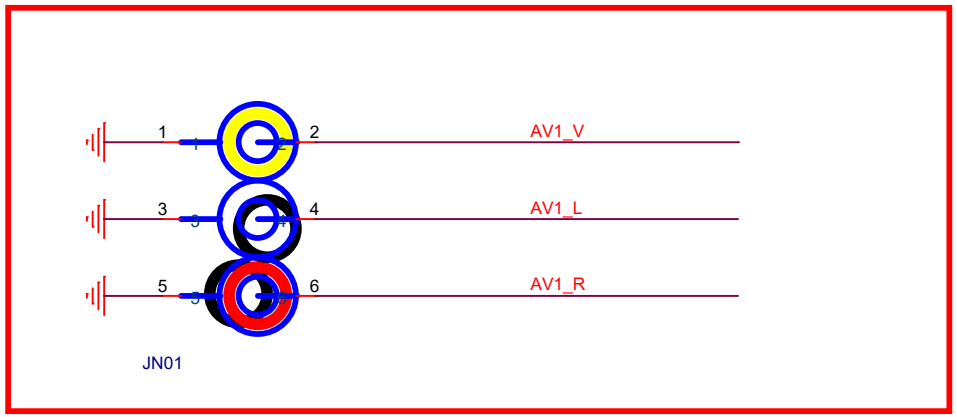
1
2
AV1_V
3
4
AV1_L
5
6
AV1_R
JN01

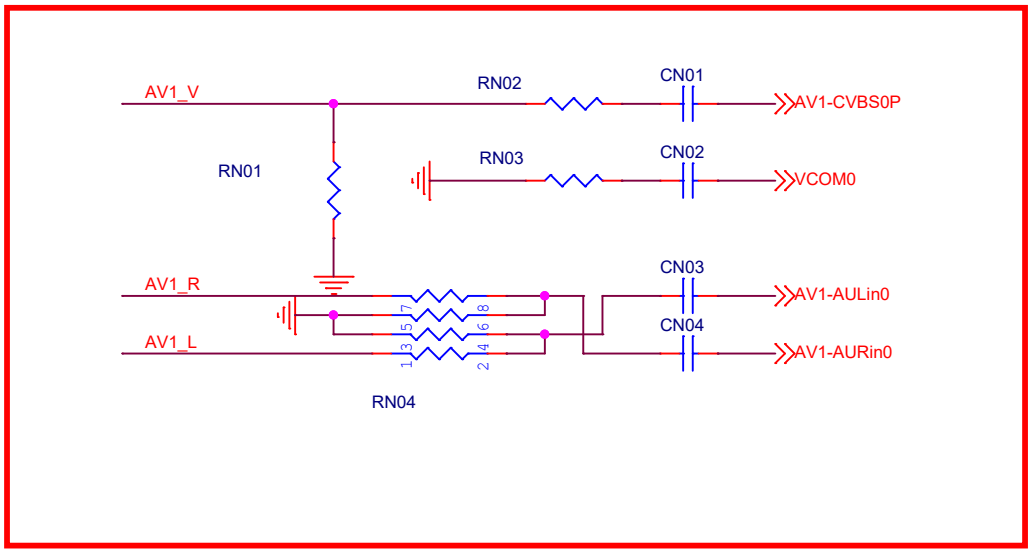
AV1_V
RN02
CN01
AV1-CVBS0P
RN01
RN03
CN02
VCOM0
AV1_R
CN03
AV1-AULin0
AV1_L
CN04
AV1-AURin0
RN04

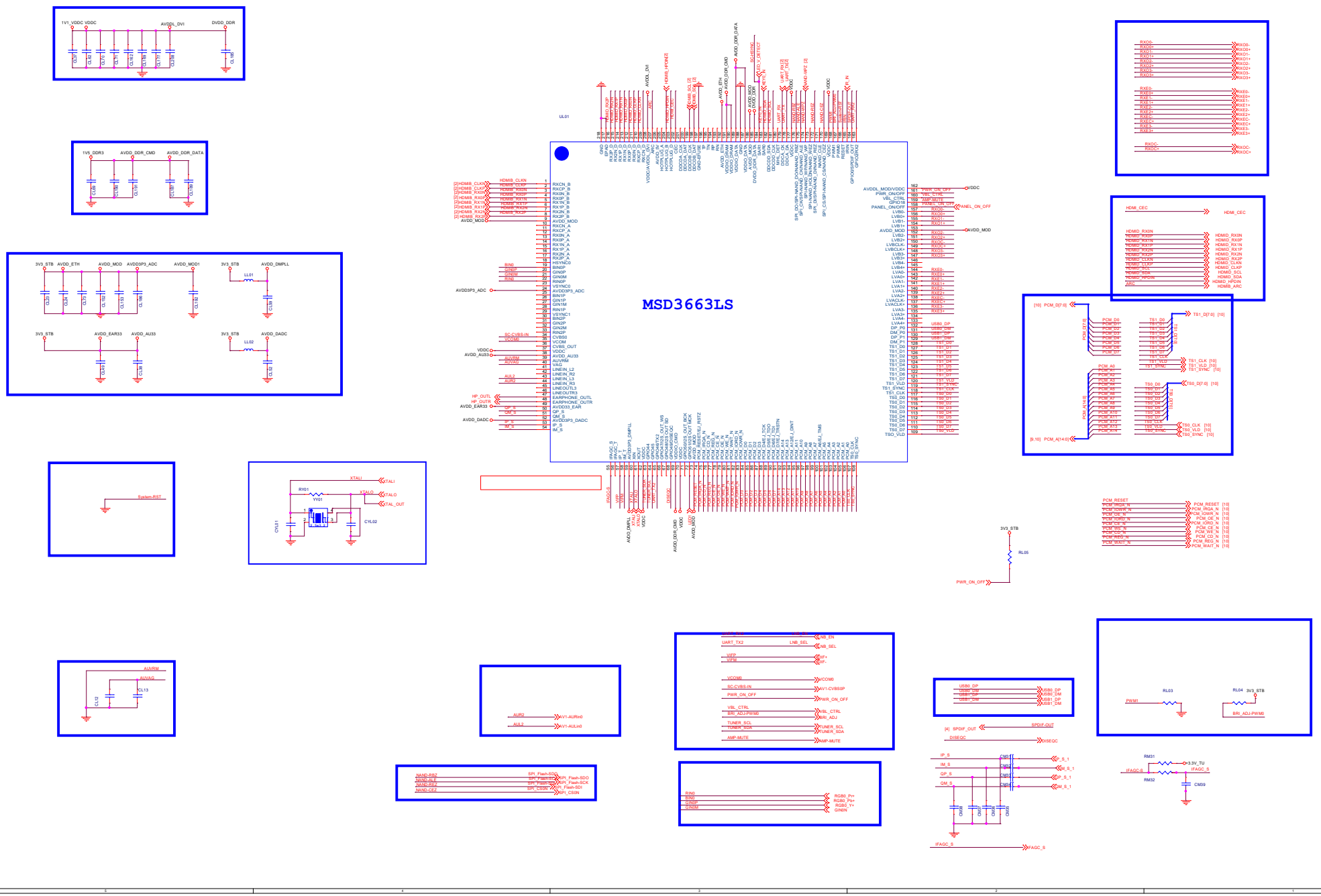
MSD3663LS
UL01
1V1_VDDC VDDC
AVDDL_DV1
DVDD_DDR
1V5_DDR3
AVDD_DDR_CMD
AVDD_DDR_DATA
3V3_STB
AVDD_ETH
AVDD_MOD
AVDD3P3_ADC
AVDD_MOD1
AVDD_DMPLL
AVDD_EAR33
AVDD_AU33
AVDD_DADC
System-RST
XTALI
XTALO
XTAL_OUT
AUVRM
AUVAG
HDMI_CEC
HDMI_RX0N
HDMI_RX0P
HDMI_RX1N
HDMI_RX1P
HDMI_RX2N
HDMI_RX2P
HDMI_CLKN
HDMI_CLKP
HDMI_SCL
HDMI_SDA
HDMI_HPDIN
ARC
HDMIB_ARC
PWR_ON_OFF
PANEL_ON_OFF
AVDDC
AVDD_MOD
PCM_RESET
PCM_IRQA_N
PCM_IOWR_N
PCM_CE_N
PCM_IORD_N
PCM_WE_N
PCM_REG_N
PCM_WAIT_N
3V3_STB
RL05
PWM1
RL03
RL04
BRI_ADJ-PWM0
RM31
RM32
CM39
3.3V_TU
IFAGC_S
SPDIF-OUT
DISEQC
USB0_DP
USB0_DM
USB1_DP
USB1_DM
NB_EN
NB_SEL
VIFP
VIFM
VCOM0
SC-CVBS-IN
AV1-CVBS0P
PWR_ON_OFF
VBL_CTRL
BRI_ADJ
TUNER_SCL
TUNER_SDA
AMP-MUTE
AUR2
AUL2
AV1-AURin0
AV1-AULin0
NAND-RBZ
NAND-WLE
NAND-REZ
NAND-CEZ
SPI_Flash-SDO
SPI_Flash-SCK
SPI_Flash-SDI
SPI_CSON
RIN0
BIN0
GIN0P
GIN0M
RGB0_Pr+
RGB0_Pb+
RGB0_Y+
GIN0N
IP_S
IM_S
QP_S
QM_S
IFAGC_S

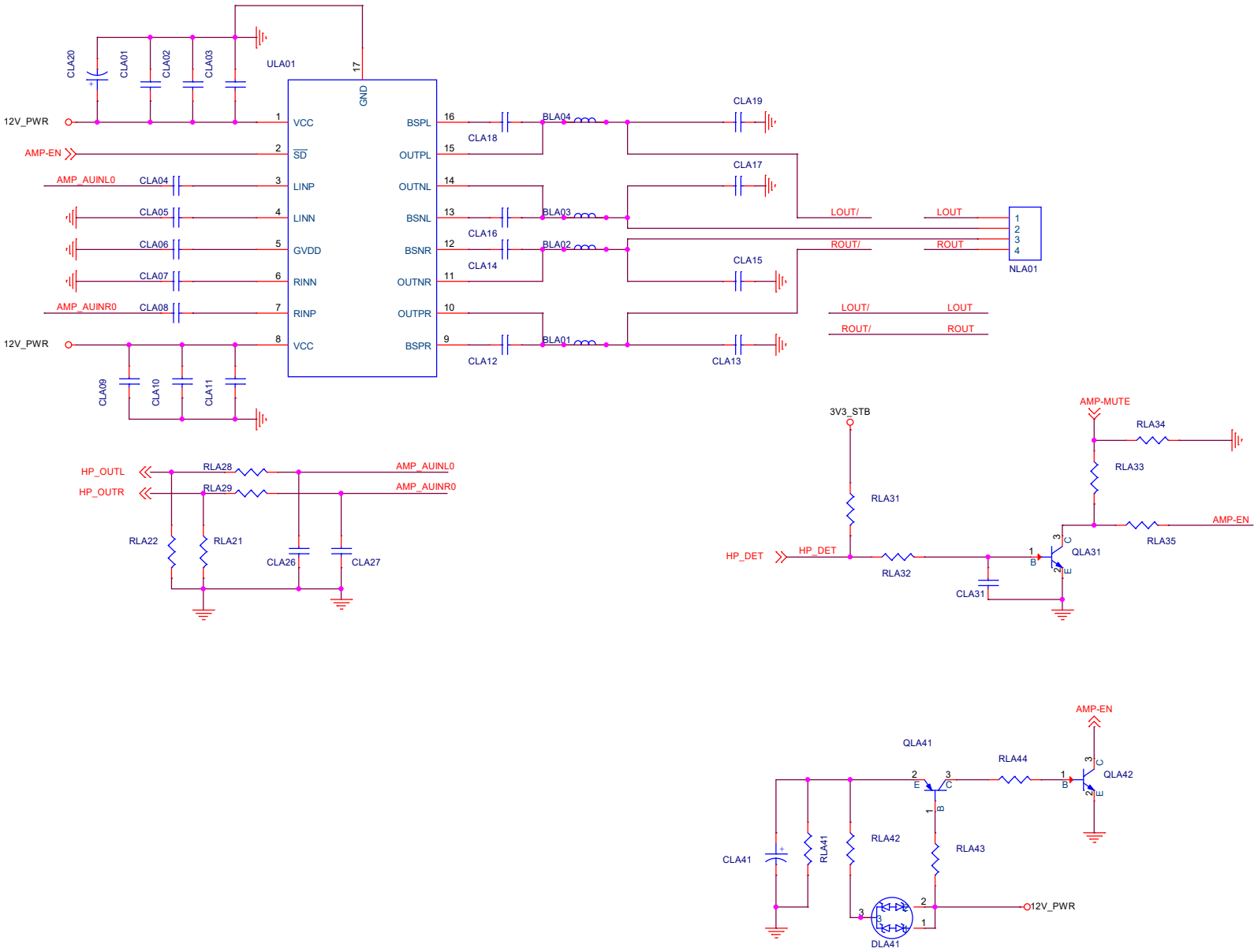
ULA01
GND
17
12V_PWR
AMP-EN
AMP_AUINL0
AMP_AUINR0
VCC
SD
LINP
LINN
GVDD
RINN
RINP
VCC
BSPL
OUTPL
OUTNL
BSNL
BSNR
OUTNR
OUTPR
BSPR
CLA20
CLA01
CLA02
CLA03
CLA04
CLA05
CLA06
CLA07
CLA08
CLA09
CLA10
CLA11
CLA12
CLA13
CLA14
CLA15
CLA16
CLA17
CLA18
CLA19
BLA01
BLA02
BLA03
BLA04
LOUT/
LOUT
ROUT/
ROUT
NLA01
HP_OUTL
HP_OUTR
RLA28
RLA29
RLA22
RLA21
CLA26
CLA27
3V3_STB
RLA31
HP_DET
RLA32
CLA31
QLA31
AMP-MUTE
RLA34
RLA33
RLA35
QLA41
RLA44
QLA42
CLA41
RLA41
RLA42
RLA43
DLA41

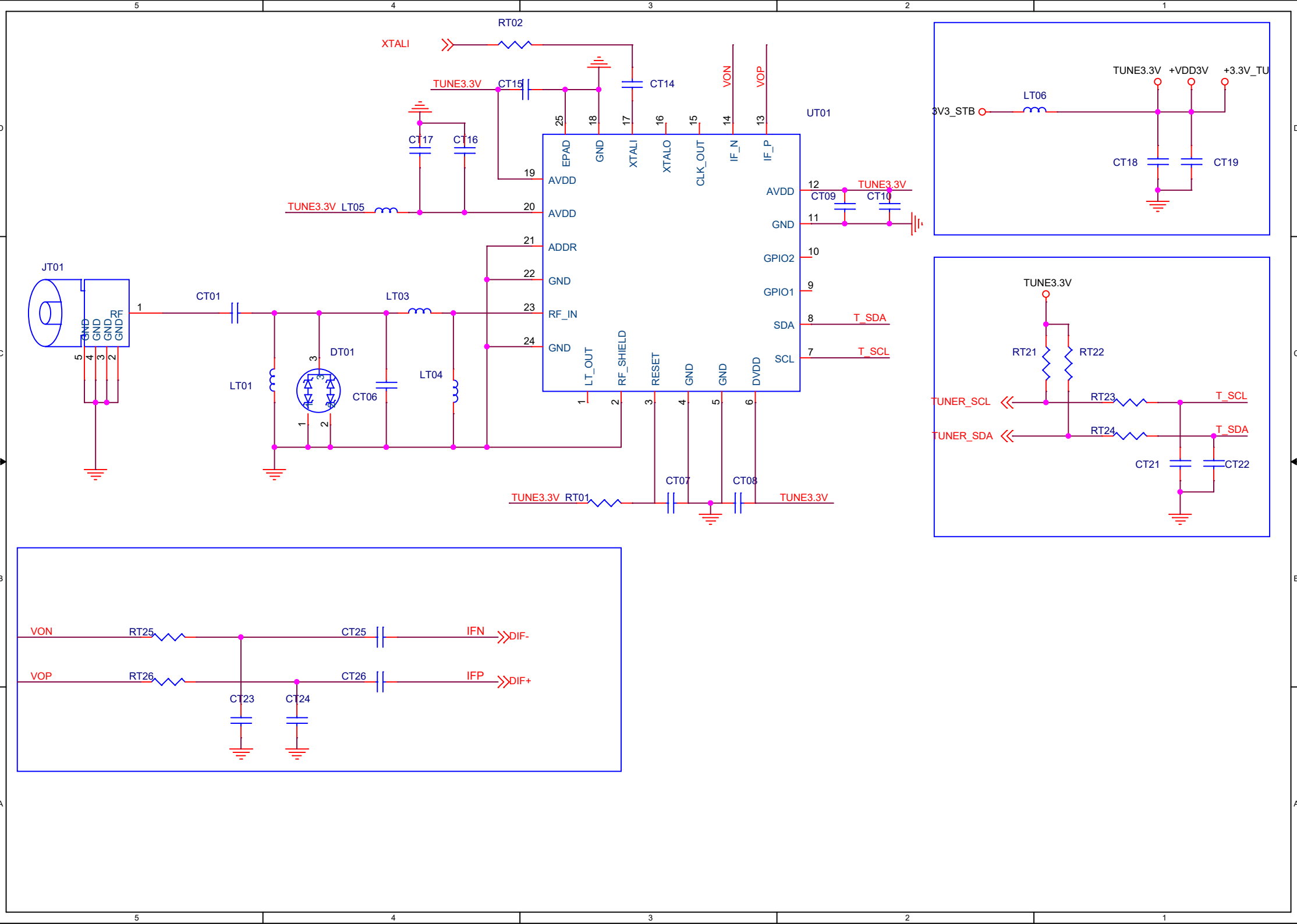
RT02
XTALI
TUNE3.3V
CT15
CT14
VON
VOP
UT01
CT17
CT16
EPAD
GND
XTALI
XTALO
CLK_OUT
IF_N
IF_P
AVDD
AVDD
ADDR
GND
RF_IN
GND
AVDD
GND
GPIO2
GPIO1
SDA
SCL
TUNE3.3V
CT09
CT10
TUNE3.3V
LT05
JT01
RF
GND
GND
GND
GND
CT01
LT03
DT01
LT01
CT06
LT04
LT_OUT
RF_SHIELD
RESET
GND
GND
DVDD
T_SDA
T_SCL
CT07
CT08
TUNE3.3V
RT01
TUNE3.3V
TUNE3.3V
+VDD3V
+3.3V_TU
3V3_STB
LT06
CT18
CT19
TUNE3.3V
RT21
RT22
TUNER_SCL
TUNER_SDA
RT23
RT24
T_SCL
T_SDA
CT21
CT22
VON
RT25
CT25
IFN
DIF-
VOP
RT26
CT26
IFP
DIF+
CT23
CT24

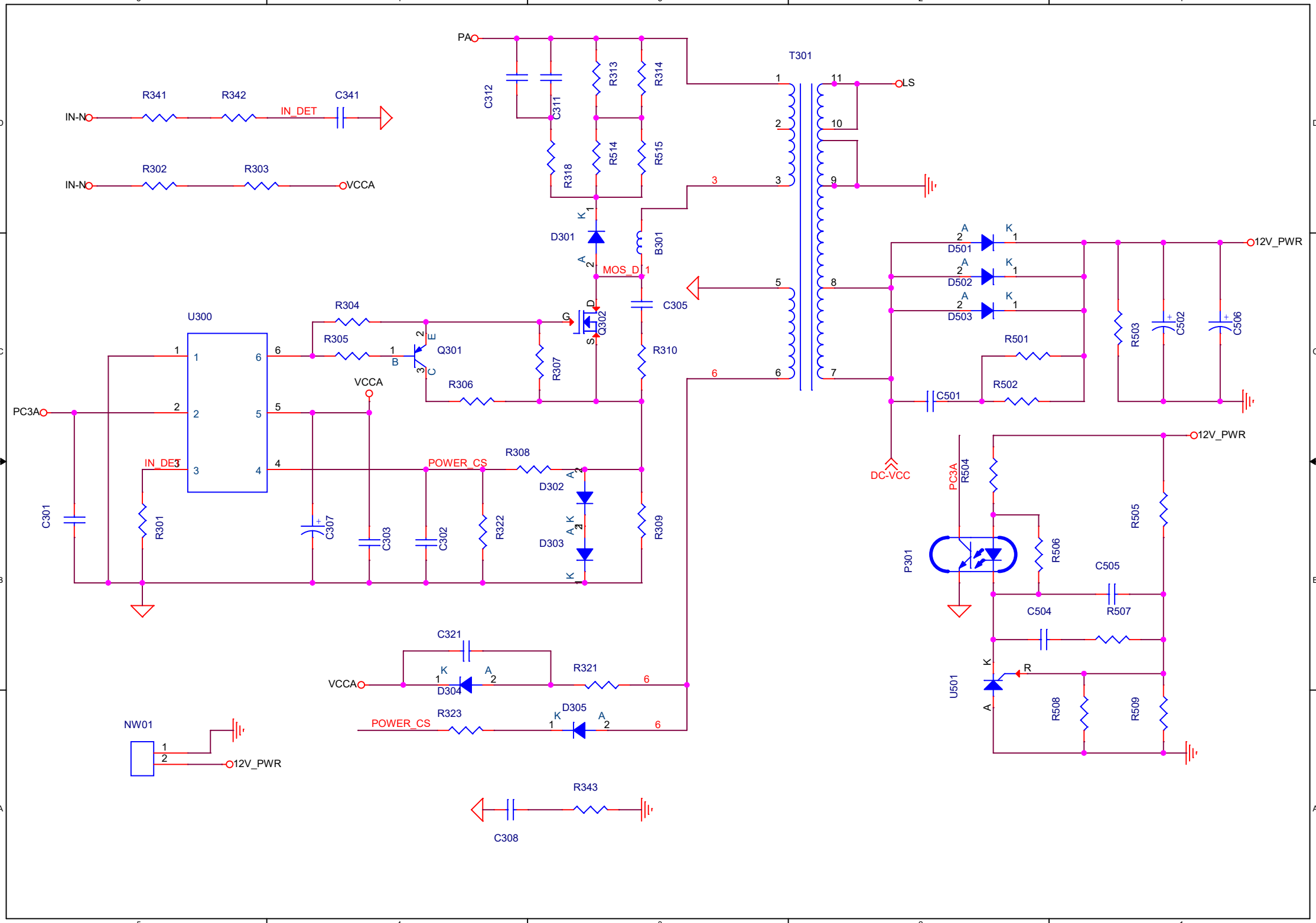
PA
T301
LS
IN-N
R341
R342
IN_DET
C341
IN-N
R302
R303
VCCA
C312
C311
R313
R314
R318
R514
R515
D301
B301
MOS_D
C305
R310
Q302
G
D
S
R304
R305
Q301
B
E
C
R306
R307
U300
PC3A
VCCA
IN_DET
POWER_CS
R308
D302
D303
R309
C301
R301
C307
C303
C302
R322
C321
VCCA
D304
R321
POWER_CS
R323
D305
NW01
12V_PWR
R343
C308
D501
D502
D503
12V_PWR
R503
C502
C506
R501
R502
C501
DC-VCC
PC3A
R504
12V_PWR
R505
P301
R506
C505
C504
R507
U501
R508
R509

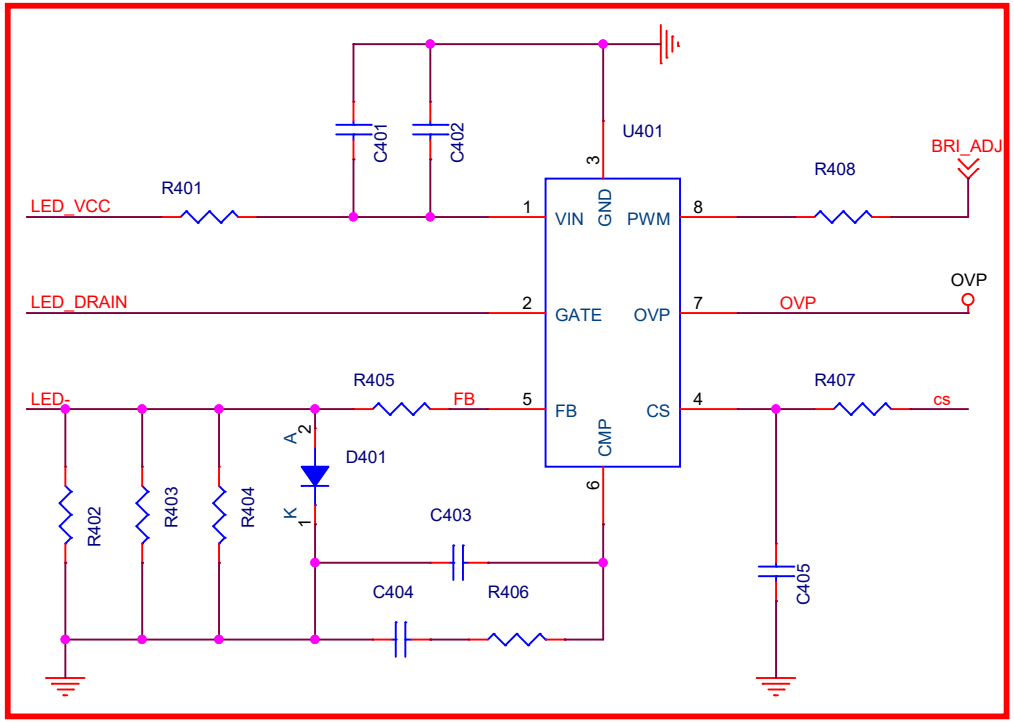
U401
C401
C402
LED_VCC
R401
VIN
GND
PWM
R408
BRI_ADJ
LED_DRAIN
GATE
OVP
OVP
LED-
R405
FB
FB
CS
R407
cs
CMP
D401
R402
R403
R404
C403
C404
R406
C405

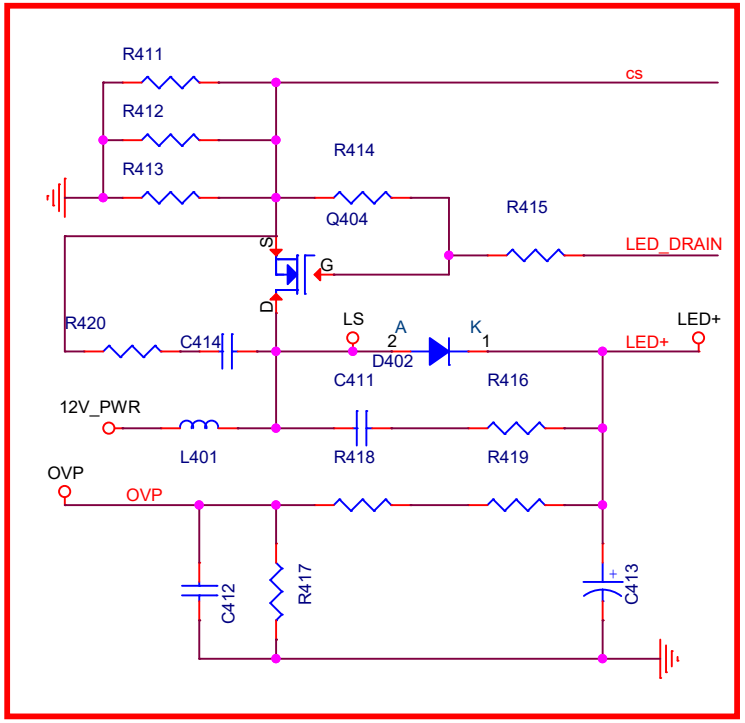
R411
cs
R412
R414
R413
Q404
R415
LED_DRAIN
R420
C414
LS
D402
LED+
LED+
C411
R416
12V_PWR
L401
R418
R419
OVP
OVP
C412
R417
C413

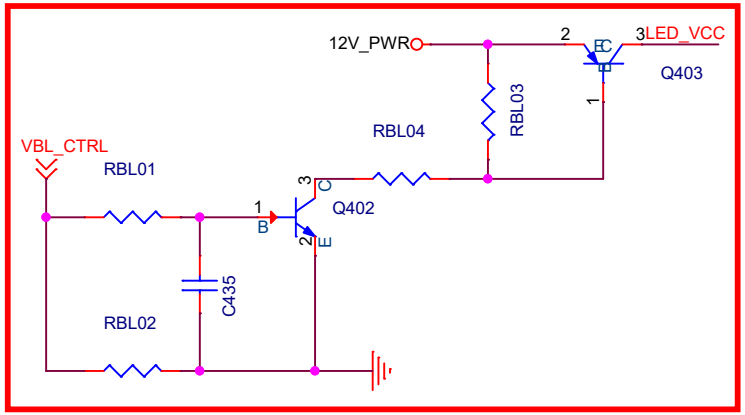
12V_PWR
LED_VCC
Q403
RBL03
RBL04
VBL_CTRL
RBL01
Q402
C435
RBL02

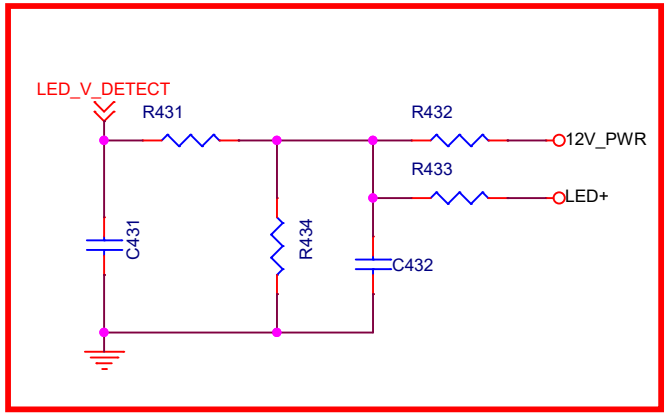
LED_V_DETECT
R431
R432
12V_PWR
R433
LED+
C431
R434
C432

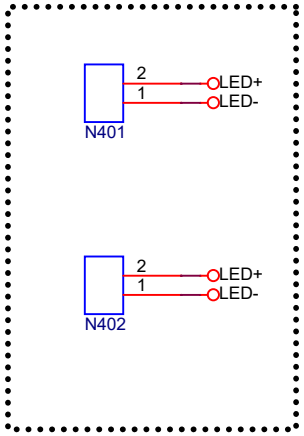
N401
LED+
LED-
N402
LED+
LED-

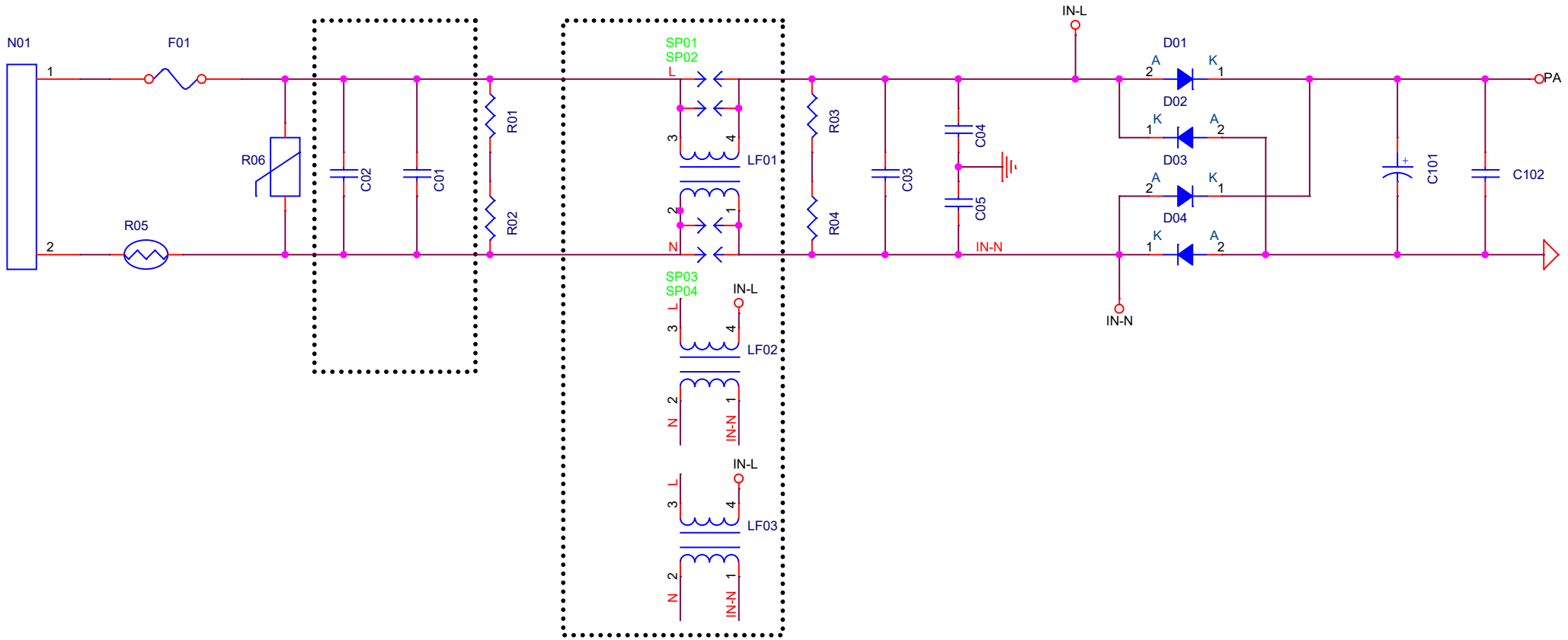
N01
F01
1
2
R05
R06
C02
C01
R01
R02
SP01
SP02
L
N
3
4
2
1
LF01
SP03
SP04
LF02
LF03
IN-L
IN-N
R03
R04
C03
C04
C05
D01
D02
D03
D04
A
K
C101
C102
PA

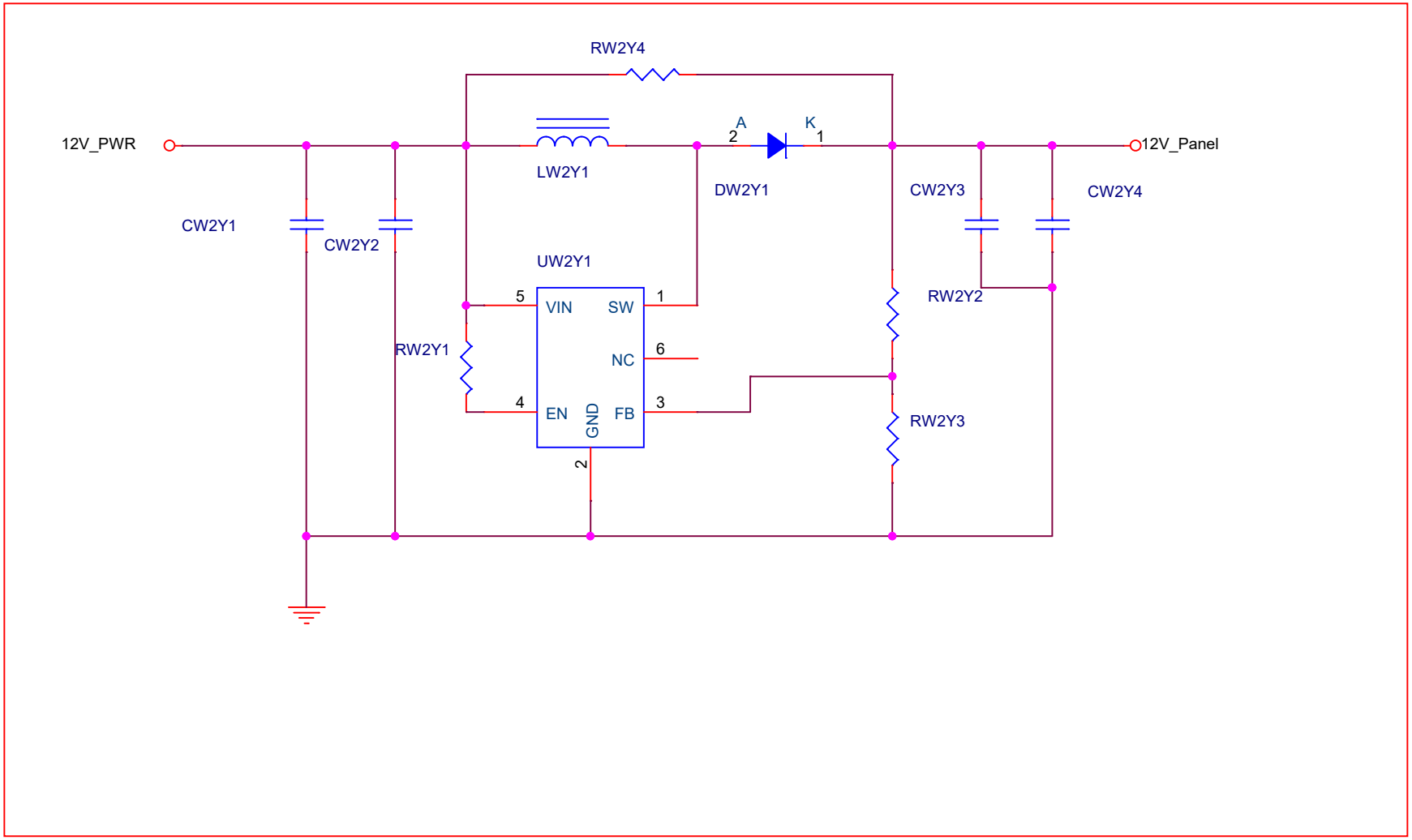
RW2Y4
12V_PWR
LW2Y1
A
2
K
1
DW2Y1
12V_Panel
CW2Y3
CW2Y4
CW2Y1
CW2Y2
UW2Y1
5
VIN
SW
1
RW2Y2
RW2Y1
NC
6
4
EN
GND
FB
3
RW2Y3
2

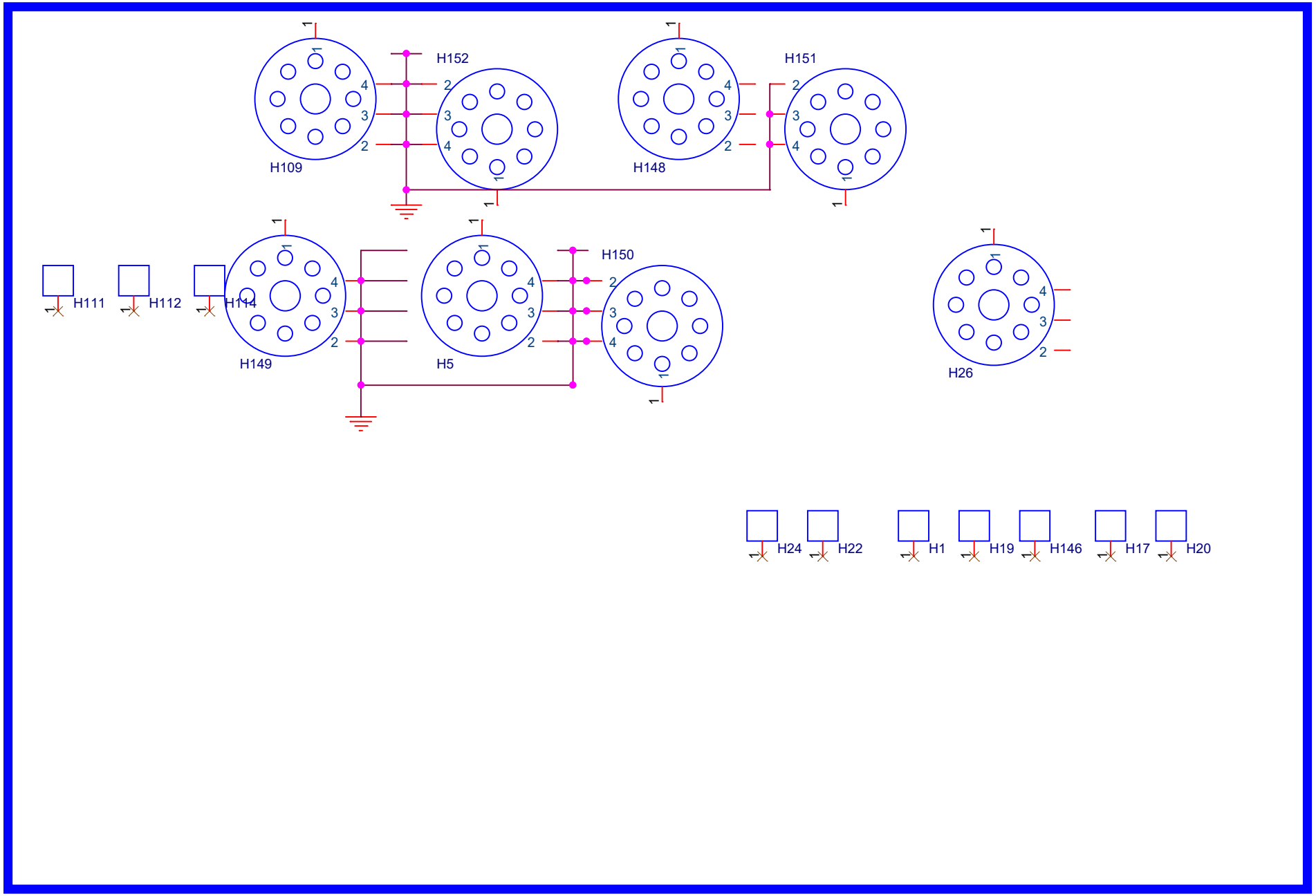
H152
H151
H109
H148
H111
H112
H114
H149
H5
H150
H26
H24
H22
H1
H19
H146
H17
H20

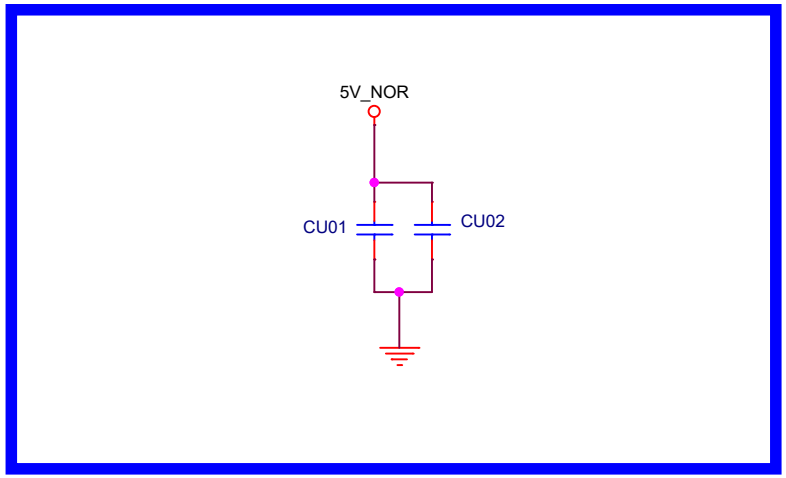
5V_NOR
CU01
CU02

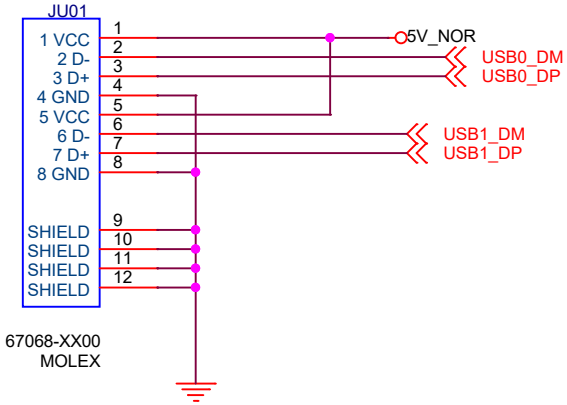
JU01
1 VCC
2 D-
3 D+
4 GND
5 VCC
6 D-
7 D+
8 GND
SHIELD
SHIELD
SHIELD
SHIELD
1
2
3
4
5
6
7
8
9
10
11
12
5V_NOR
USB0_DM
USB0_DP
USB1_DM
USB1_DP
67068-XX00
MOLEX

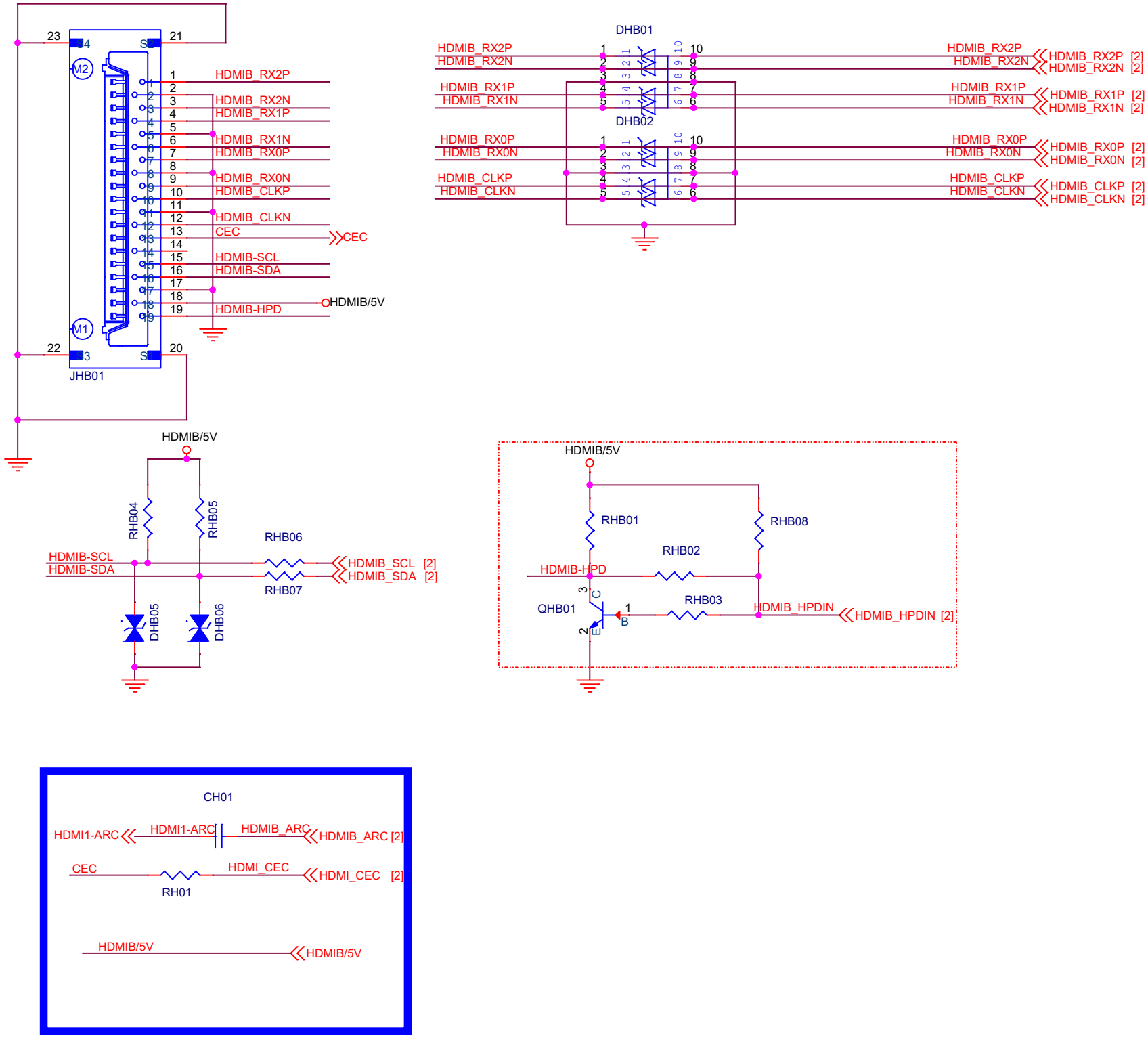
JHB01
M1
M2
HDMIB_RX2P
HDMIB_RX2N
HDMIB_RX1P
HDMIB_RX1N
HDMIB_RX0P
HDMIB_RX0N
HDMIB_CLKP
HDMIB_CLKN
CEC
HDMIB-SCL
HDMIB-SDA
HDMIB-HPD
HDMIB/5V
DHB01
DHB02
HDMIB_RX2P [2]
HDMIB_RX2N [2]
HDMIB_RX1P [2]
HDMIB_RX1N [2]
HDMIB_RX0P [2]
HDMIB_RX0N [2]
HDMIB_CLKP [2]
HDMIB_CLKN [2]
RHB04
RHB05
RHB06
RHB07
DHB05
DHB06
HDMIB_SCL [2]
HDMIB_SDA [2]
RHB01
RHB02
RHB03
RHB08
QHB01
HDMIB_HPDIN
HDMIB_HPDIN [2]
CH01
HDMI1-ARC
HDMIB_ARC
HDMIB_ARC [2]
HDMI_CEC
HDMI_CEC [2]
RH01

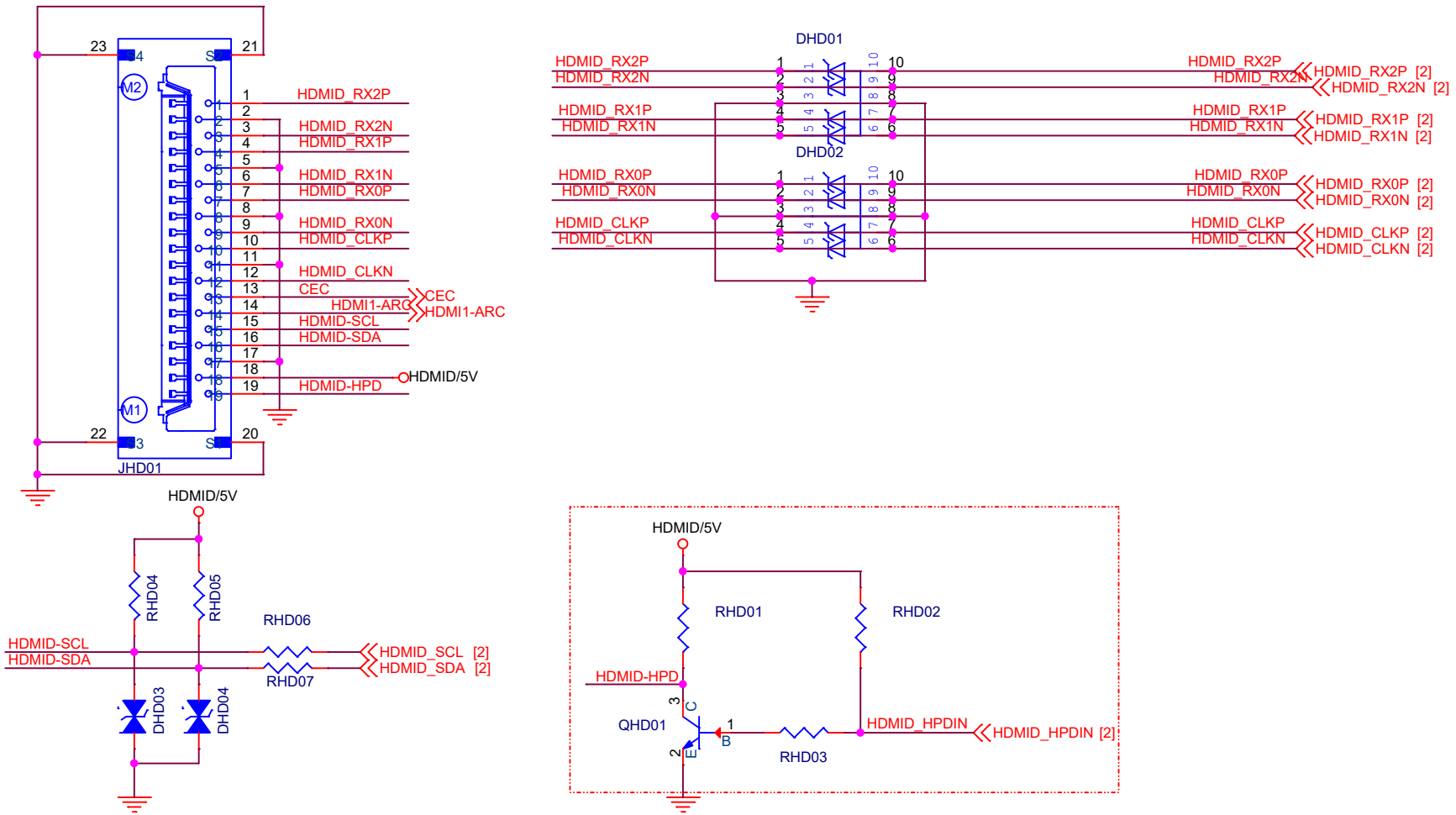
JHD01
M1
M2
HDMID_RX2P
HDMID_RX2N
HDMID_RX1P
HDMID_RX1N
HDMID_RX0P
HDMID_RX0N
HDMID_CLKP
HDMID_CLKN
CEC
HDMI1-ARC
HDMID-SCL
HDMID-SDA
HDMID-HPD
HDMID/5V
DHD01
DHD02
HDMID_RX2P [2]
HDMID_RX2N [2]
HDMID_RX1P [2]
HDMID_RX1N [2]
HDMID_RX0P [2]
HDMID_RX0N [2]
HDMID_CLKP [2]
HDMID_CLKN [2]
RHD04
RHD05
RHD06
RHD07
DHD03
DHD04
HDMID_SCL [2]
HDMID_SDA [2]
RHD01
RHD02
QHD01
RHD03
HDMID_HPDIN
HDMID_HPDIN [2]

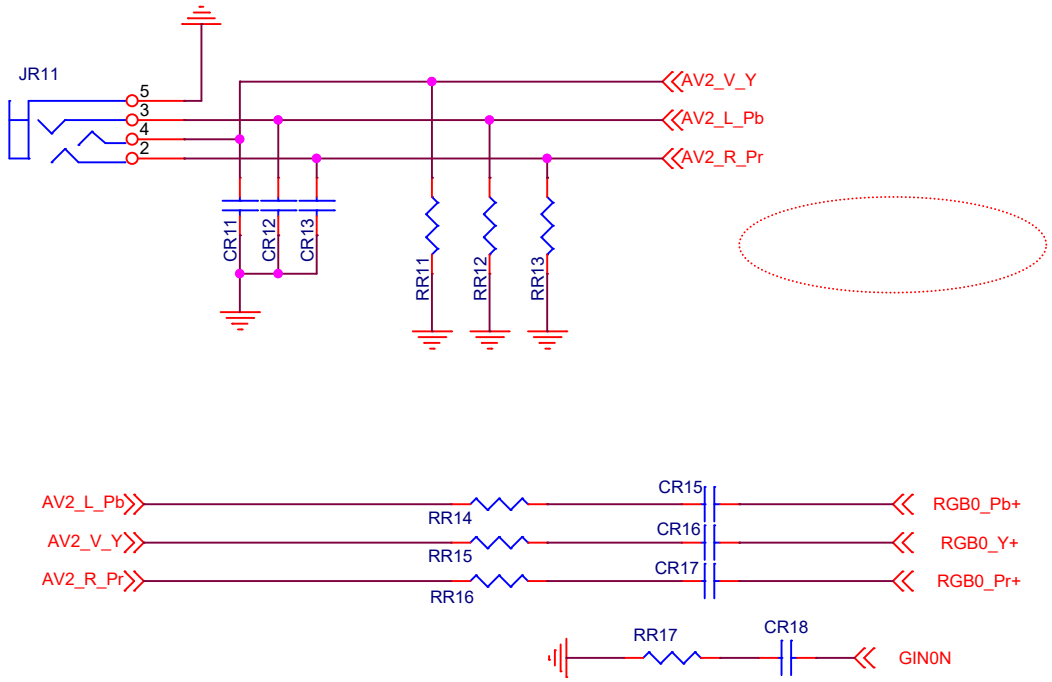
JR11
5
3
4
2
AV2_V_Y
AV2_L_Pb
AV2_R_Pr
CR11
CR12
CR13
RR11
RR12
RR13
AV2_L_Pb
AV2_V_Y
AV2_R_Pr
RR14
RR15
RR16
CR15
CR16
CR17
RGB0_Pb+
RGB0_Y+
RGB0_Pr+
RR17
CR18
GIN0N

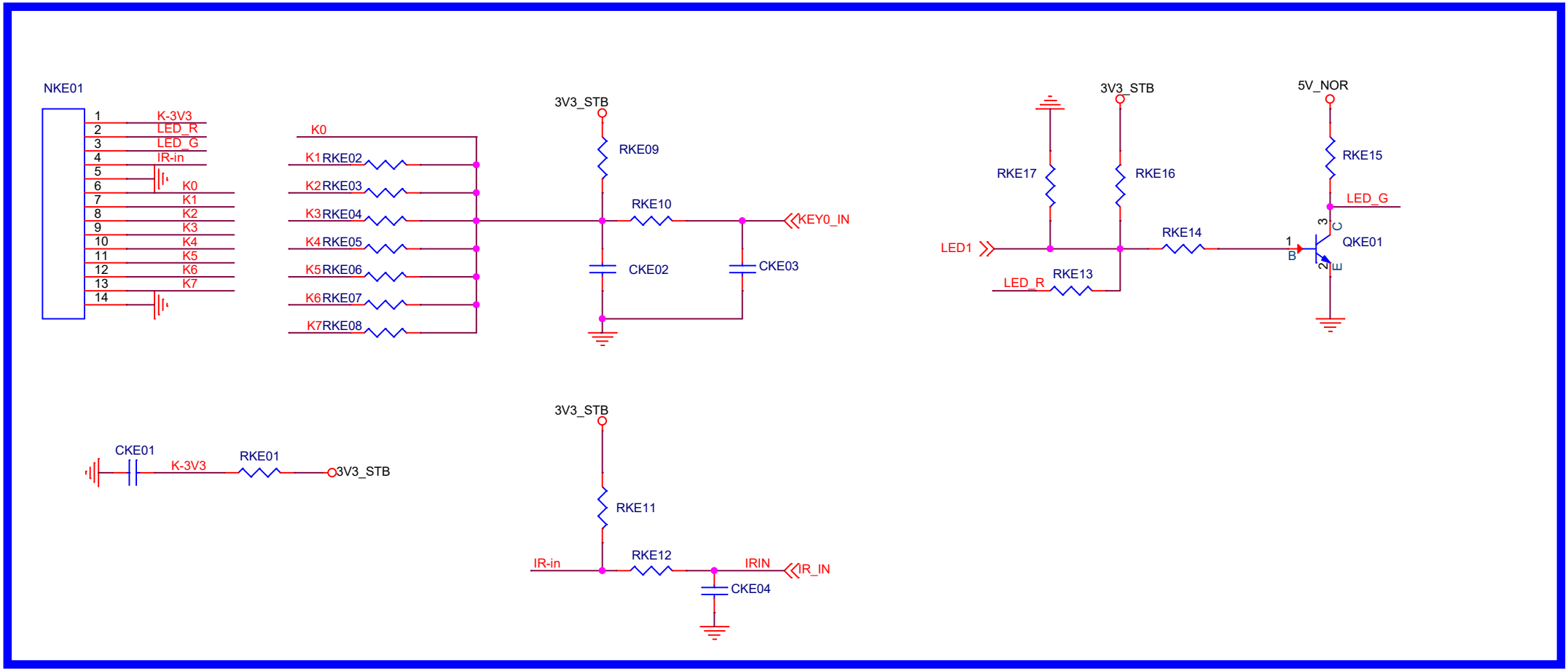
NKE01
1 K-3V3
2 LED_R
3 LED_G
4 IR-in
5
6 K0
7 K1
8 K2
9 K3
10 K4
11 K5
12 K6
13 K7
14
K0
K1 RKE02
K2 RKE03
K3 RKE04
K4 RKE05
K5 RKE06
K6 RKE07
K7 RKE08
3V3_STB
RKE09
RKE10
KEY0_IN
CKE02
CKE03
3V3_STB
5V_NOR
RKE17
RKE16
RKE15
LED_G
LED1
RKE14
QKE01
LED_R
RKE13
CKE01
K-3V3
RKE01
3V3_STB
3V3_STB
RKE11
IR-in
RKE12
IRIN
IR_IN
CKE04

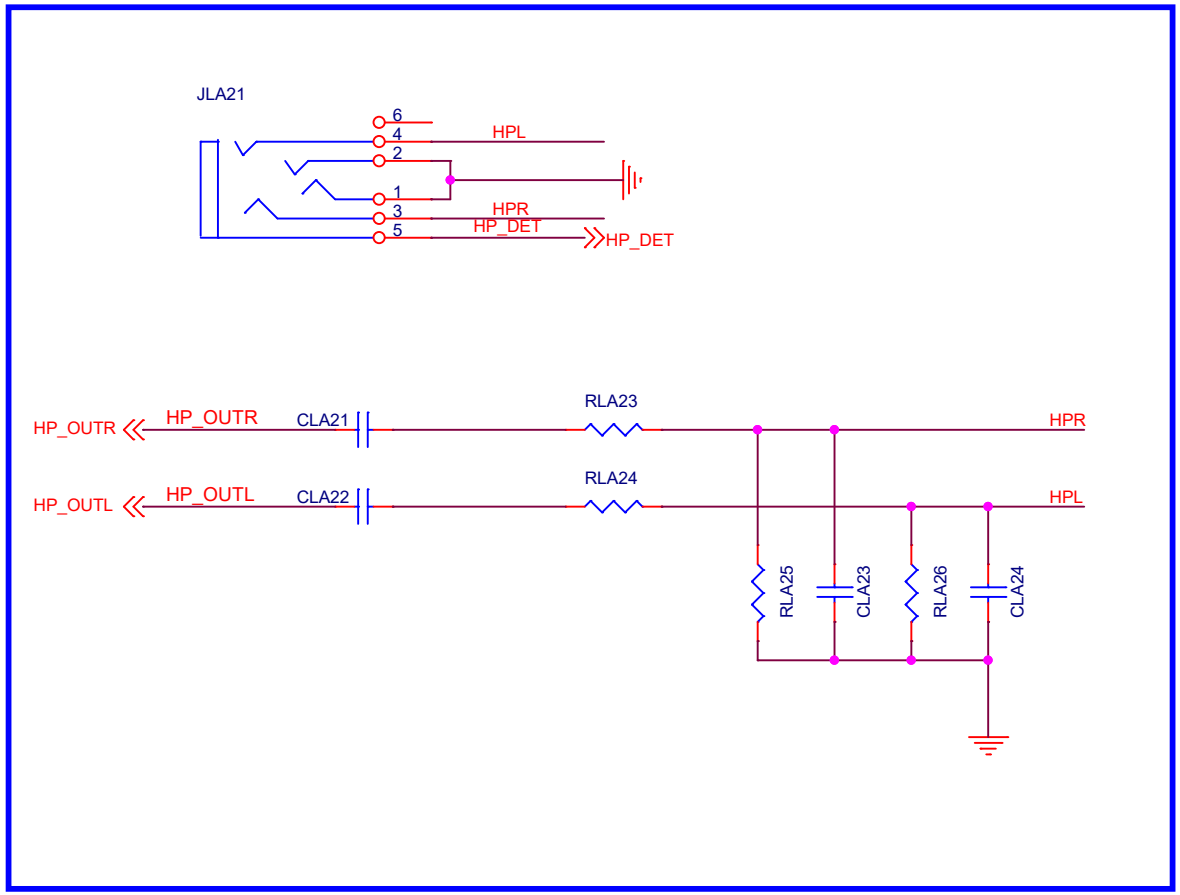
JLA21
6
4
2
1
3
5
HPL
HPR
HP_DET
HP_DET
HP_OUTR
HP_OUTR
CLA21
RLA23
HPR
HP_OUTL
HP_OUTL
CLA22
RLA24
HPL
RLA25
CLA23
RLA26
CLA24

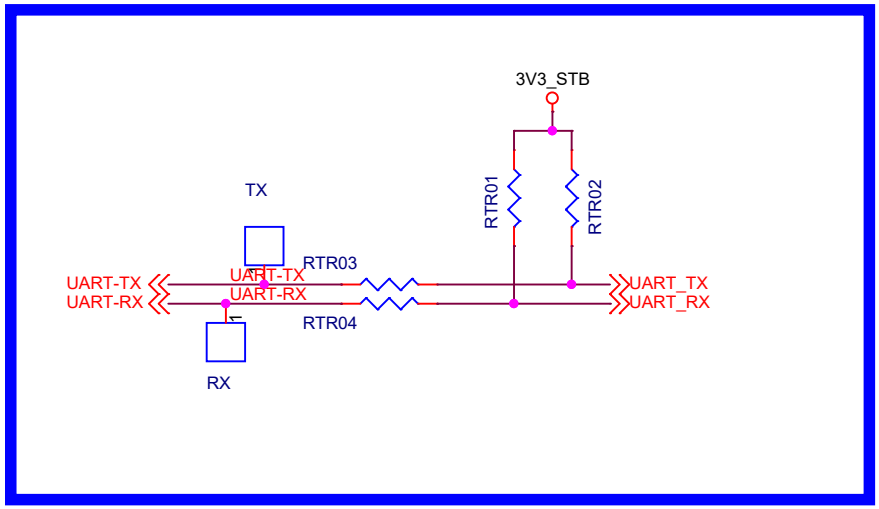
3V3_STB
RTR01
RTR02
TX
RTR03
UART-TX
UART-RX
UART-TX
UART-RX
UART_TX
UART_RX
RTR04
RX

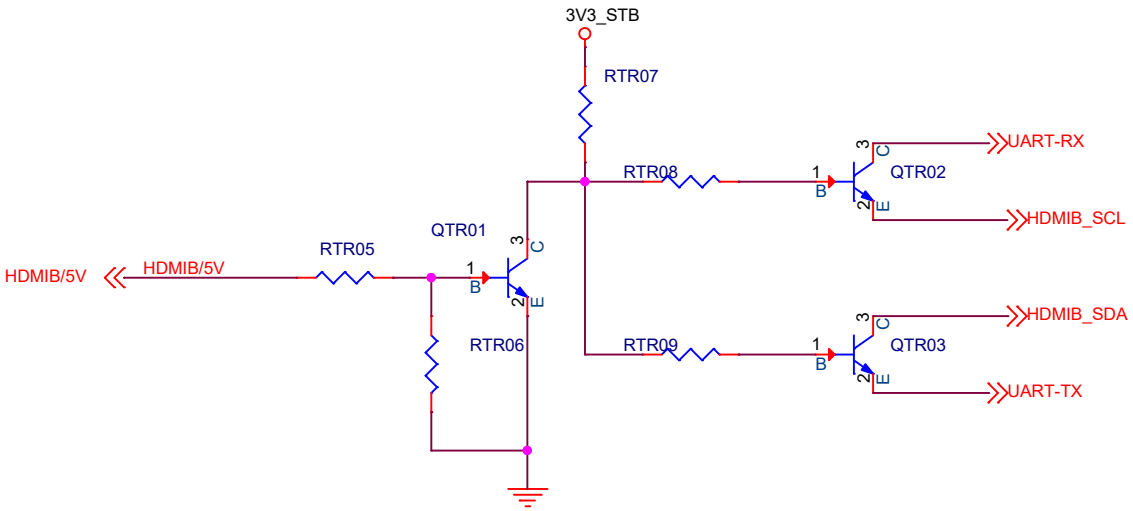
3V3_STB
RTR07
RTR08
QTR02
UART-RX
HDMIB_SCL
QTR01
RTR05
HDMIB/5V
HDMIB/5V
RTR06
RTR09
QTR03
HDMIB_SDA
UART-TX

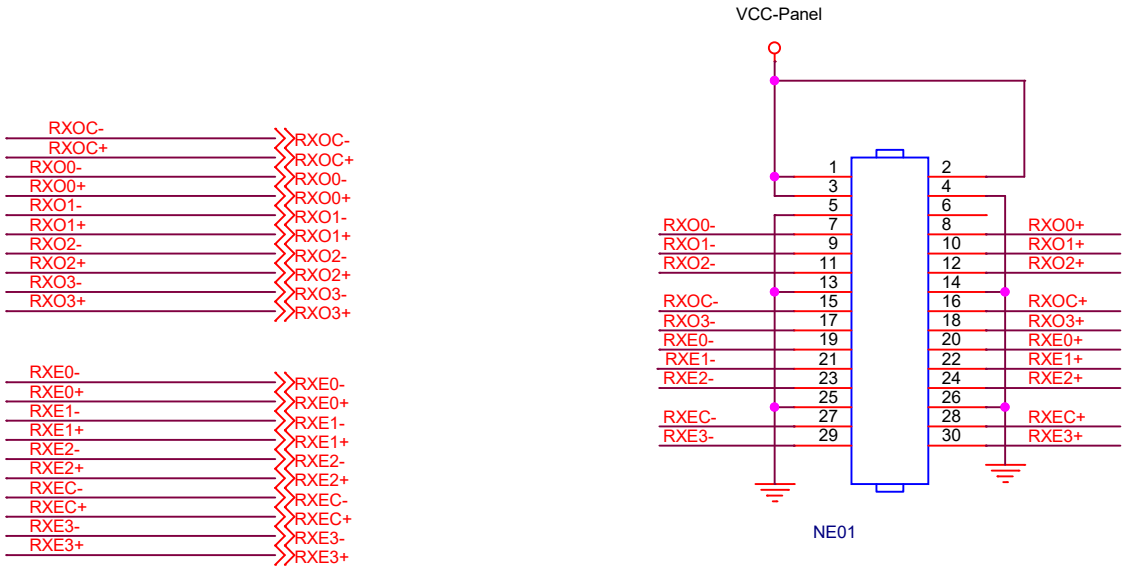
RXOC-
RXOC+
RXO0-
RXO0+
RXO1-
RXO1+
RXO2-
RXO2+
RXO3-
RXO3+
RXE0-
RXE0+
RXE1-
RXE1+
RXE2-
RXE2+
RXEC-
RXEC+
RXE3-
RXE3+
VCC-Panel
1
2
3
4
5
6
7
8
9
10
11
12
13
14
15
16
17
18
19
20
21
22
23
24
25
26
27
28
29
30
RXO0-
RXO1-
RXO2-
RXOC-
RXO3-
RXE0-
RXE1-
RXE2-
RXEC-
RXE3-
RXO0+
RXO1+
RXO2+
RXOC+
RXO3+
RXE0+
RXE1+
RXE2+
RXEC+
RXE3+
NE01

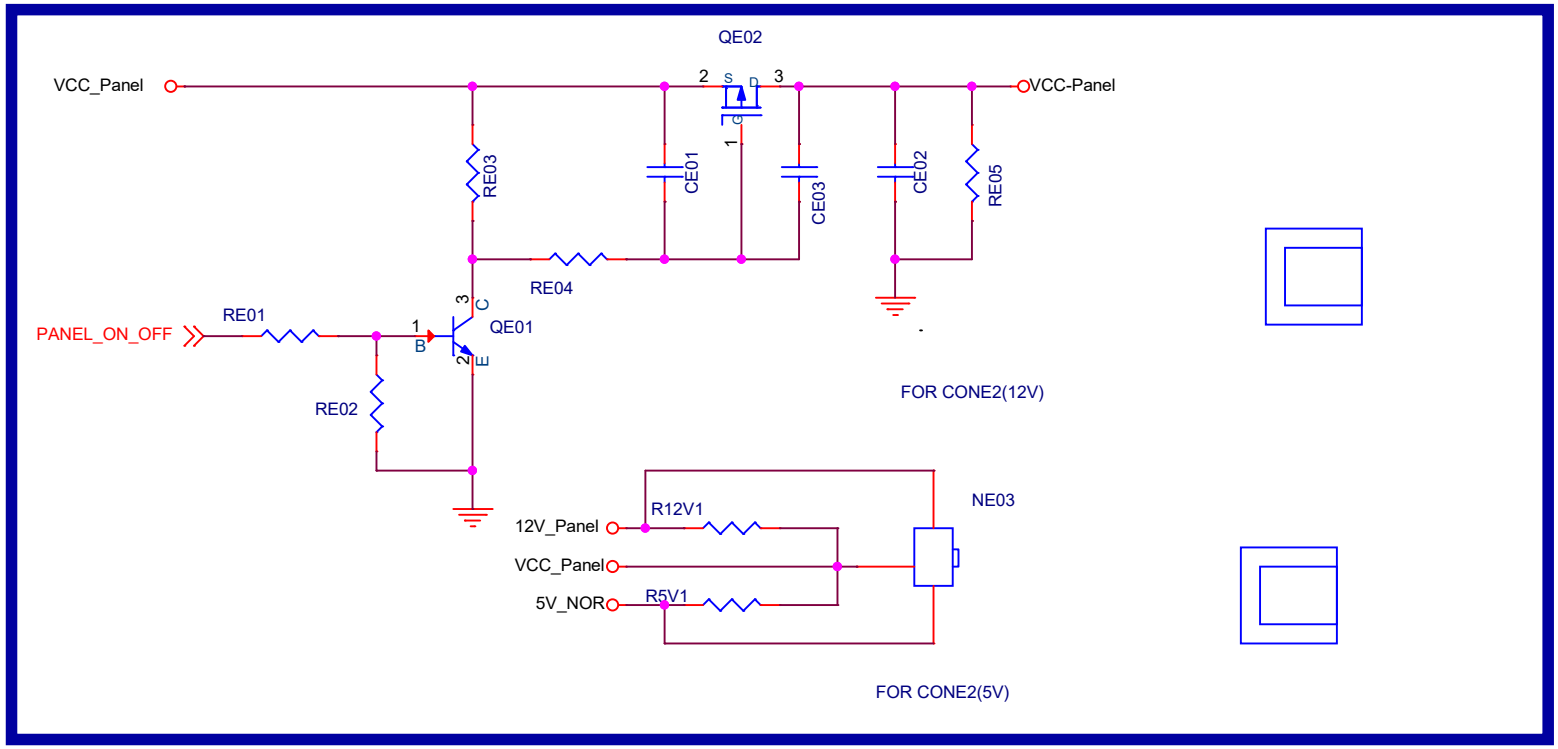
QE02
VCC_Panel
VCC-Panel
2
S
D
3
1
G
RE03
CE01
CE03
CE02
RE05
RE04
PANEL_ON_OFF
RE01
1
B
3
C
2
E
QE01
RE02
FOR CONE2(12V)
NE03
R12V1
12V_Panel
VCC_Panel
5V_NOR
R5V1
FOR CONE2(5V)

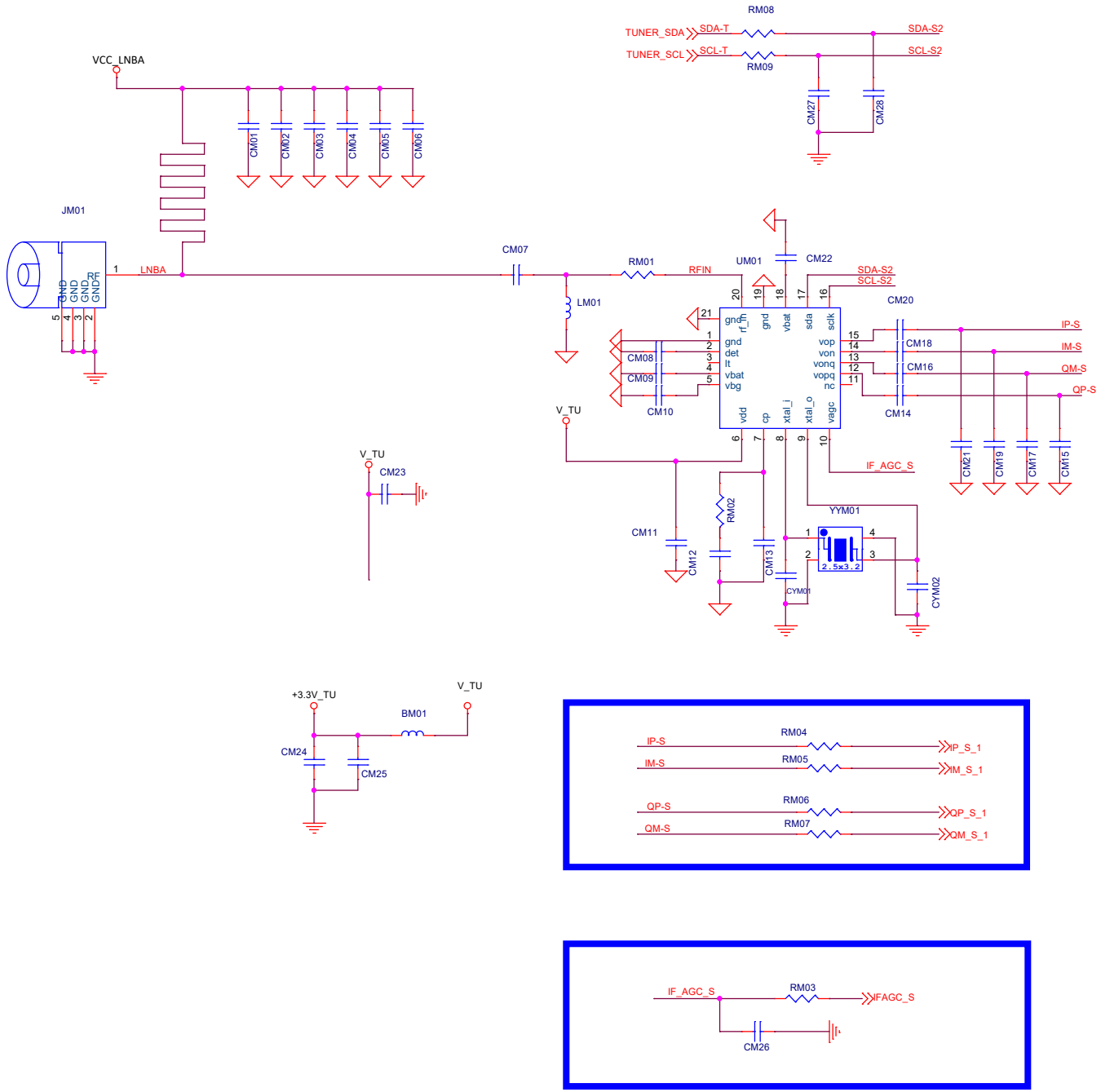
VCC_LNBA
CM01
CM02
CM03
CM04
CM05
CM06
JM01
GND
GND
GND
GND
RF
LNBA
CM07
LM01
RM01
RFIN
UM01
CM22
SDA-S2
SCL-S2
CM20
CM08
CM09
CM10
CM18
CM16
CM14
IP-S
IM-S
QM-S
QP-S
V_TU
CM23
IF_AGC_S
CM21
CM19
CM17
CM15
RM02
CM11
CM12
CM13
CYM01
YYM01
2.5x3.2
CYM02
RM08
TUNER_SDA
SDA-T
TUNER_SCL
SCL-T
RM09
CM27
CM28
+3.3V_TU
BM01
CM24
CM25
RM04
RM05
RM06
RM07
IP_S_1
IM_S_1
QP_S_1
QM_S_1
RM03
IFAGC_S
CM26

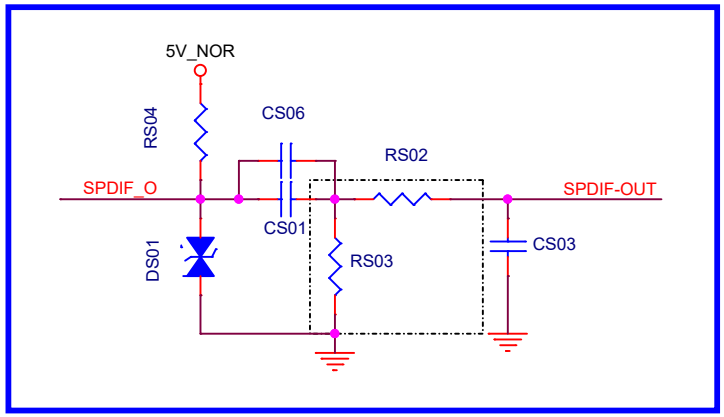
5V_NOR
RS04
CS06
RS02
SPDIF_O
SPDIF-OUT
CS01
DS01
RS03
CS03

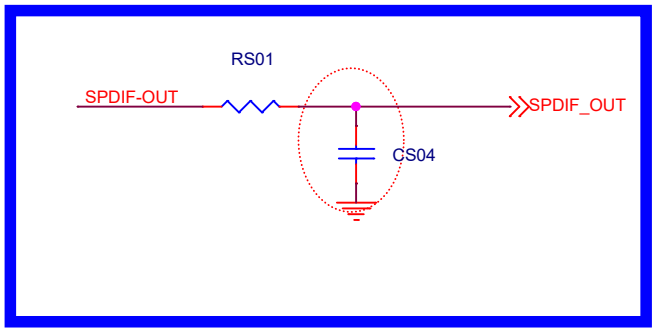
RS01
SPDIF-OUT
SPDIF_OUT
CS04

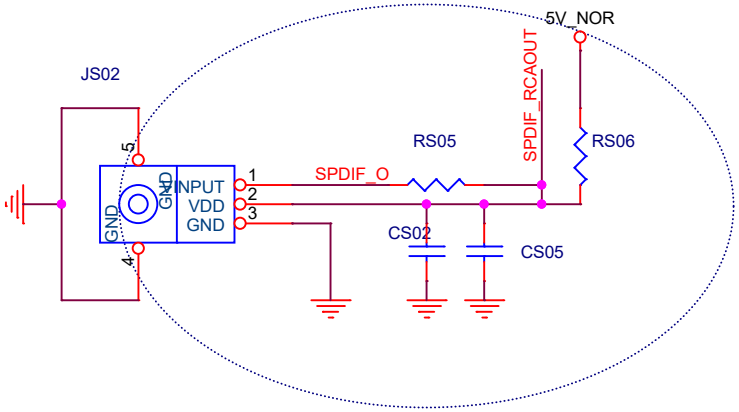
5V_NOR
JS02
SPDIF_RCAOUT
RS05
RS06
SPDIF_O
INPUT
VDD
GND
GND
GND
CS02
CS05

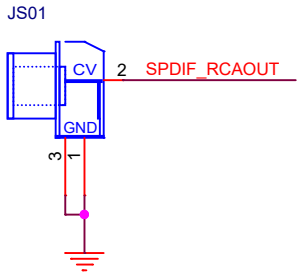
JS01
CV
2
SPDIF_RCAOUT
GND
3
1

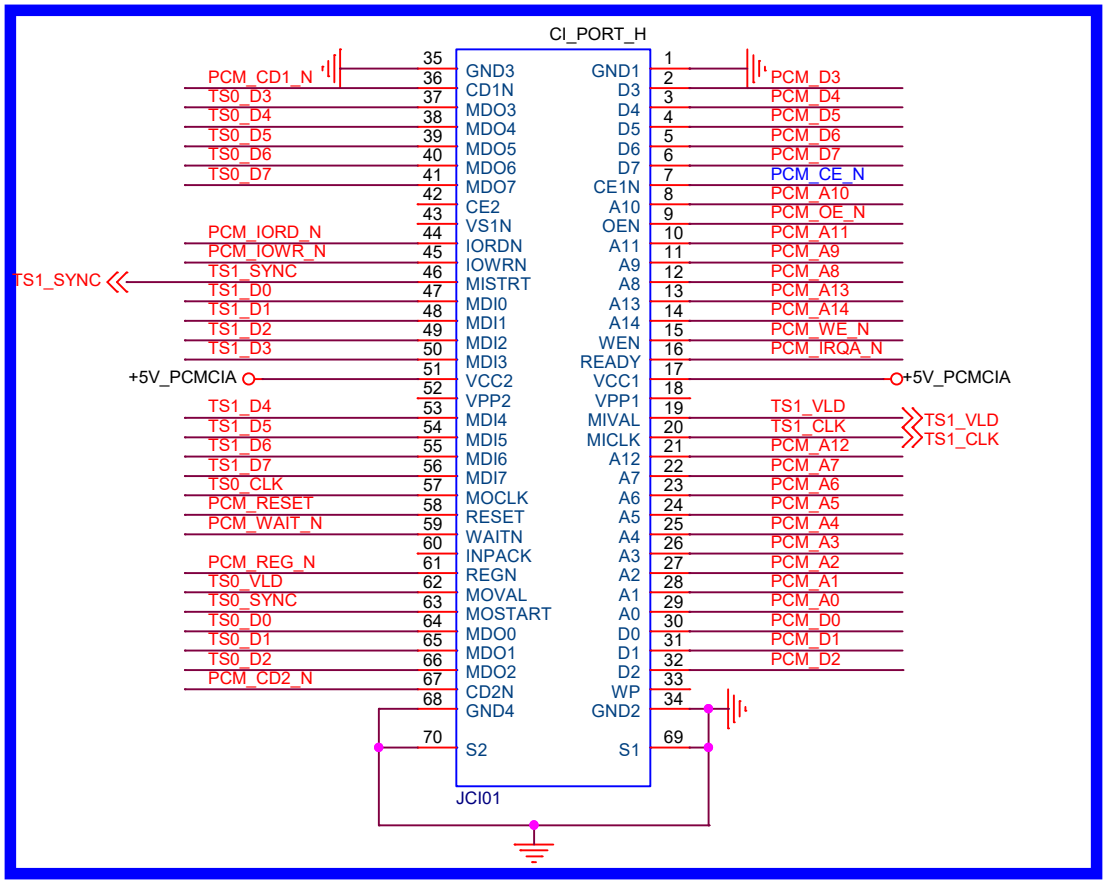
CI_PORT_H
JCI01
GND3 35
CD1N 36
MDO3 37
MDO4 38
MDO5 39
MDO6 40
MDO7 41
CE2 42
VS1N 43
IORDN 44
IOWRN 45
MISTRT 46
MDI0 47
MDI1 48
MDI2 49
MDI3 50
VCC2 51
VPP2 52
MDI4 53
MDI5 54
MDI6 55
MDI7 56
MOCLK 57
RESET 58
WAITN 59
INPACK 60
REGN 61
MOVAL 62
MOSTART 63
MDO0 64
MDO1 65
MDO2 66
CD2N 67
GND4 68
S2 70
GND1 1
D3 2
D4 3
D5 4
D6 5
D7 6
CE1N 7
A10 8
OEN 9
A11 10
A9 11
A8 12
A13 13
A14 14
WEN 15
READY 16
VCC1 17
VPP1 18
MIVAL 19
MICLK 20
A12 21
A7 22
A6 23
A5 24
A4 25
A3 26
A2 27
A1 28
A0 29
D0 30
D1 31
D2 32
WP 33
GND2 34
S1 69
PCM_CD1_N
TS0_D3
TS0_D4
TS0_D5
TS0_D6
TS0_D7
PCM_IORD_N
PCM_IOWR_N
TS1_SYNC
TS1_D0
TS1_D1
TS1_D2
TS1_D3
+5V_PCMCIA
TS1_D4
TS1_D5
TS1_D6
TS1_D7
TS0_CLK
PCM_RESET
PCM_WAIT_N
PCM_REG_N
TS0_VLD
TS0_SYNC
TS0_D0
TS0_D1
TS0_D2
PCM_CD2_N
PCM_D3
PCM_D4
PCM_D5
PCM_D6
PCM_D7
PCM_CE_N
PCM_A10
PCM_OE_N
PCM_A11
PCM_A9
PCM_A8
PCM_A13
PCM_A14
PCM_WE_N
PCM_IRQA_N
+5V_PCMCIA
TS1_VLD
TS1_CLK
PCM_A12
PCM_A7
PCM_A6
PCM_A5
PCM_A4
PCM_A3
PCM_A2
PCM_A1
PCM_A0
PCM_D0
PCM_D1
PCM_D2
TS1_VLD
TS1_CLK

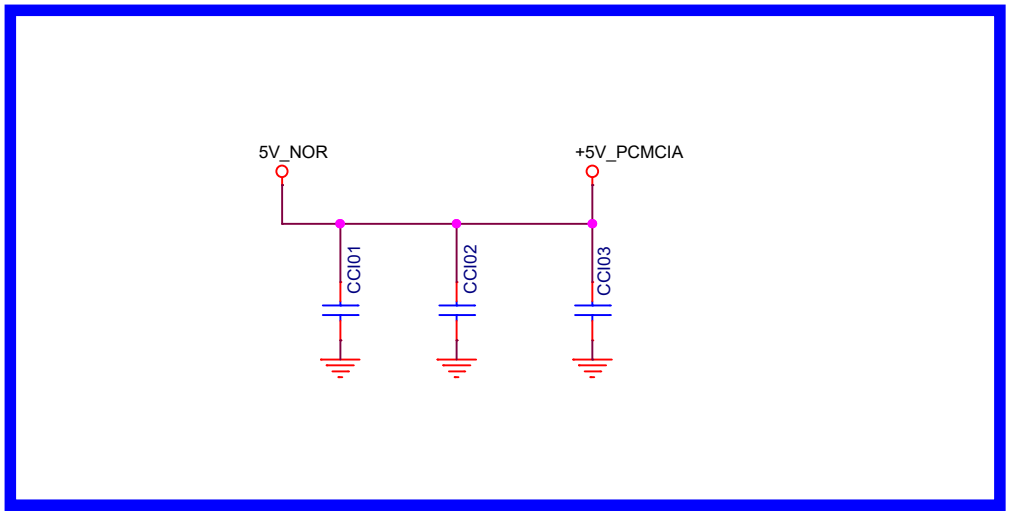
5V_NOR
+5V_PCMCIA
CCI01
CCI02
CCI03

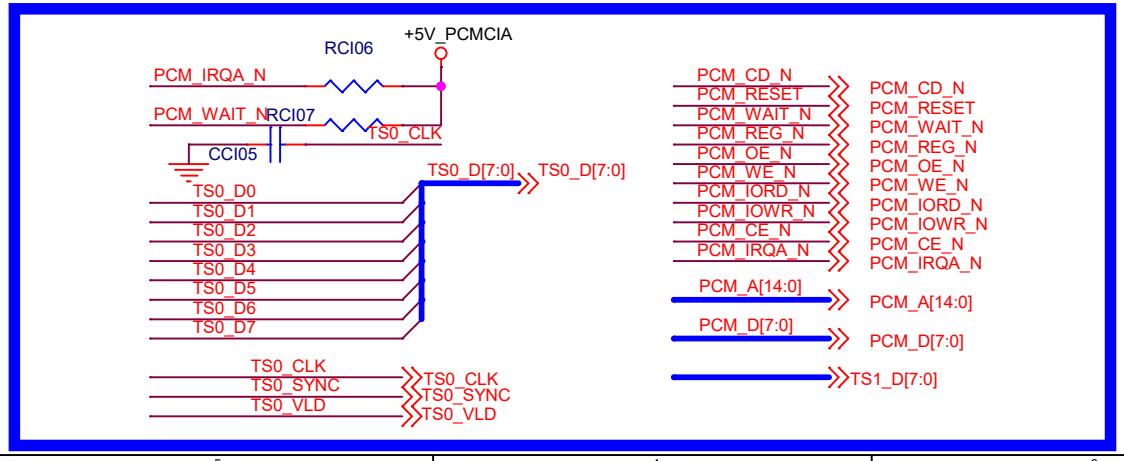
+5V_PCMCIA
RCI06
PCM_IRQA_N
PCM_WAIT_N
RCI07
TS0_CLK
CCI05
TS0_D[7:0]
TS0_D[7:0]
TS0_D0
TS0_D1
TS0_D2
TS0_D3
TS0_D4
TS0_D5
TS0_D6
TS0_D7
TS0_CLK
TS0_SYNC
TS0_VLD
TS0_CLK
TS0_SYNC
TS0_VLD
PCM_CD_N
PCM_RESET
PCM_WAIT_N
PCM_REG_N
PCM_OE_N
PCM_WE_N
PCM_IORD_N
PCM_IOWR_N
PCM_CE_N
PCM_IRQA_N
PCM_CD_N
PCM_RESET
PCM_WAIT_N
PCM_REG_N
PCM_OE_N
PCM_WE_N
PCM_IORD_N
PCM_IOWR_N
PCM_CE_N
PCM_IRQA_N
PCM_A[14:0]
PCM_A[14:0]
PCM_D[7:0]
PCM_D[7:0]
TS1_D[7:0]

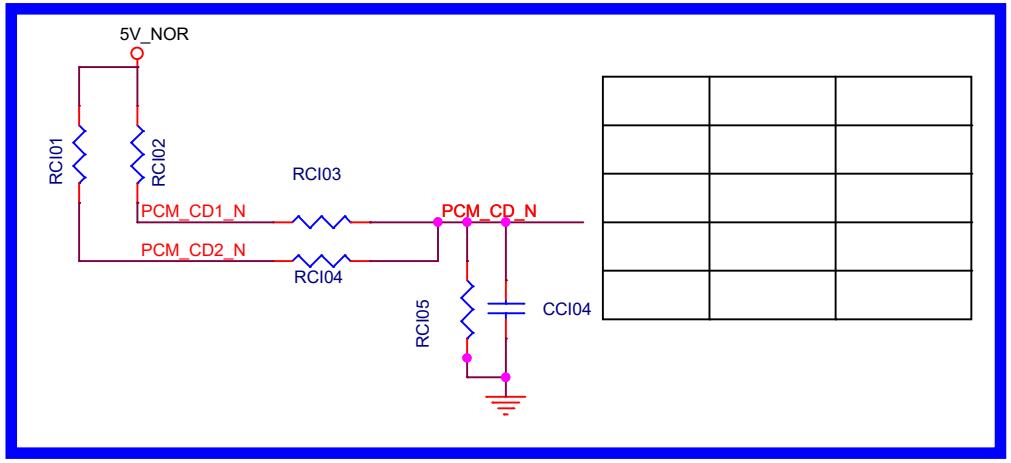
5V_NOR
RCI01
RCI02
RCI03
PCM_CD1_N
PCM_CD_N
PCM_CD2_N
RCI04
RCI05
CCI04

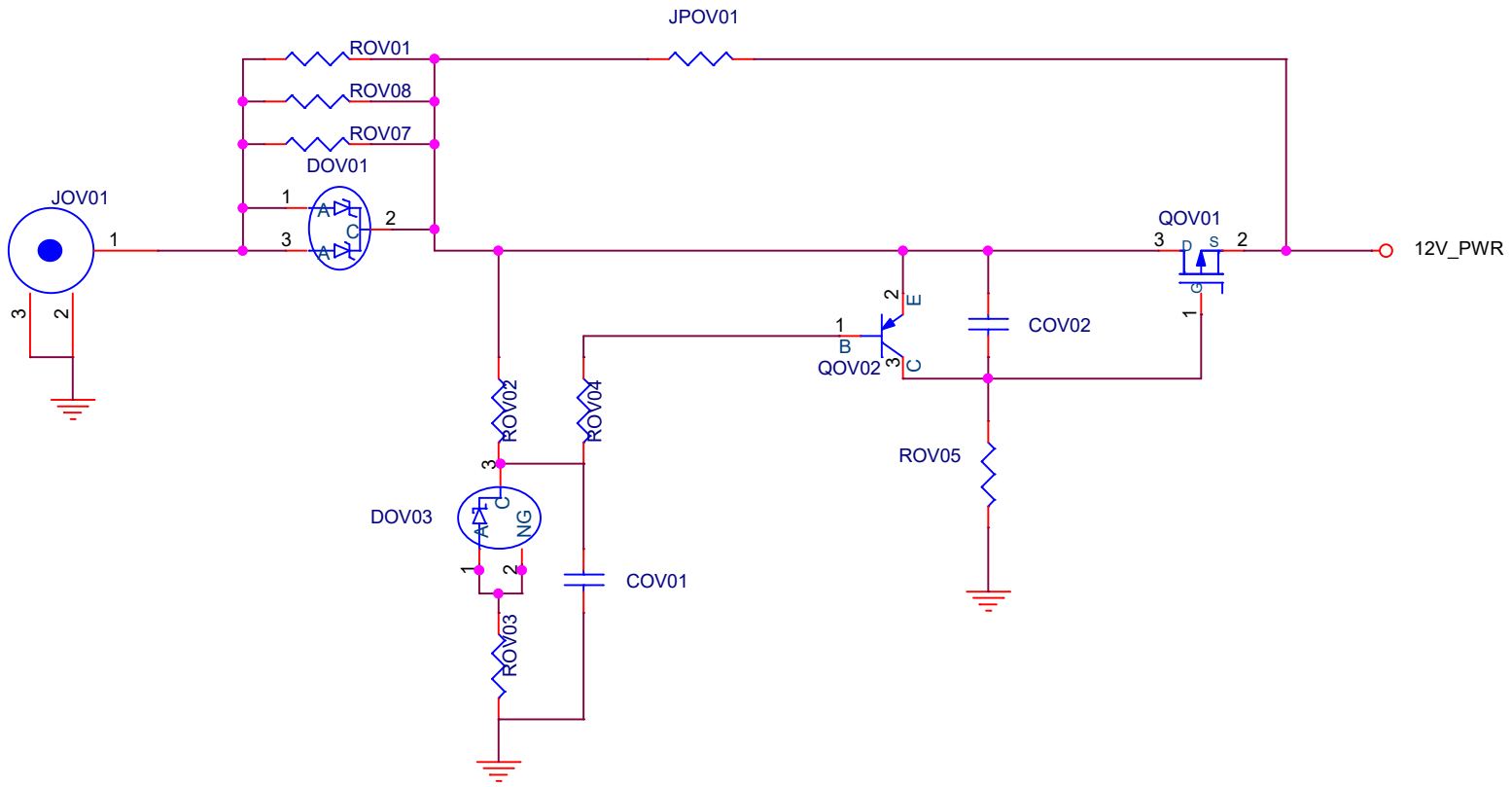
JPOV01
ROV01
ROV08
ROV07
DOV01
JOV01
QOV01
12V_PWR
COV02
QOV02
ROV05
ROV02
ROV04
DOV03
COV01
ROV03

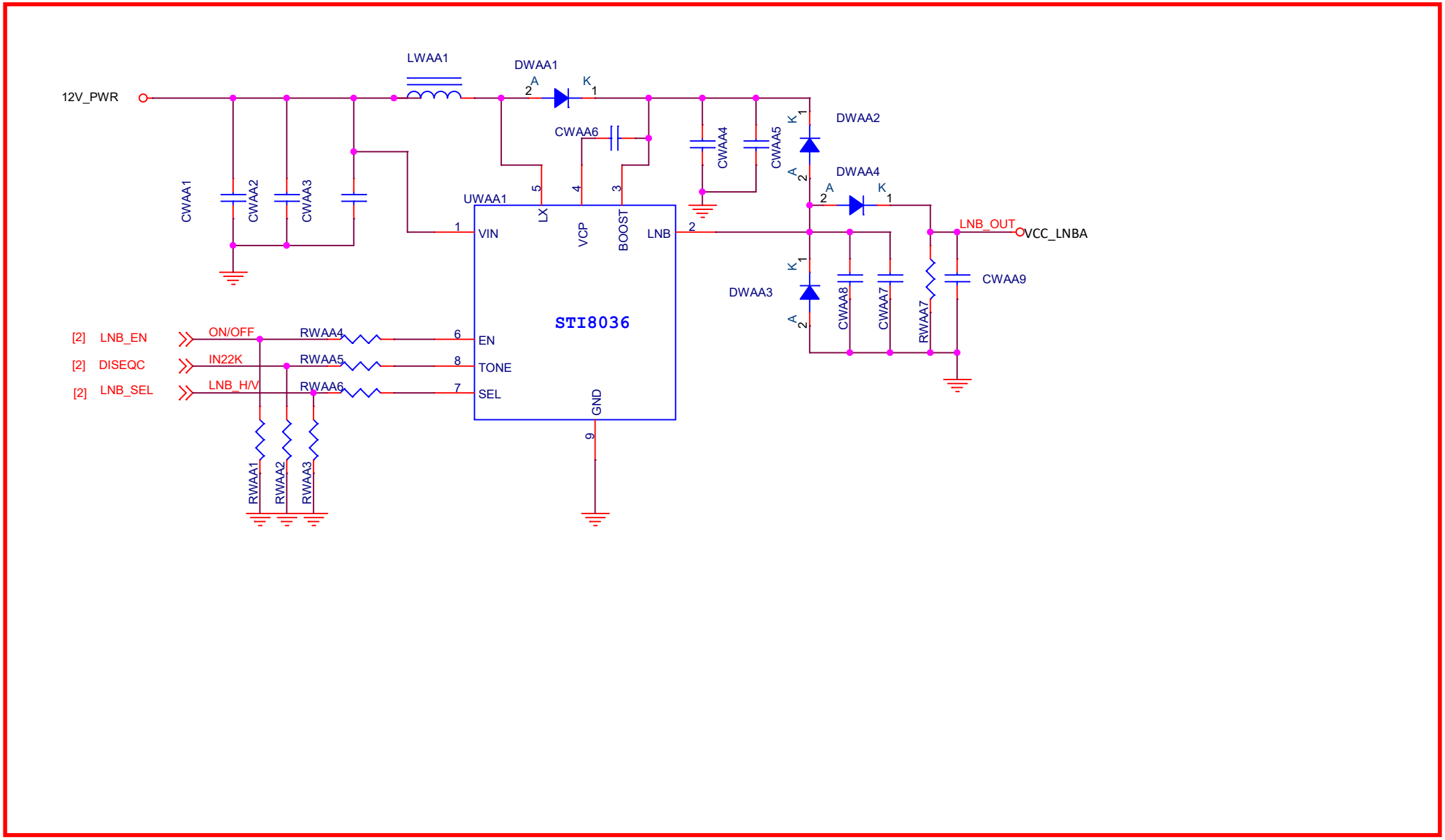
12V_PWR
LWAA1
DWAA1
A
K
2
1
CWAA6
CWAA4
CWAA5
DWAA2
DWAA4
CWAA1
CWAA2
CWAA3
UWAA1
5
4
3
1
VIN
LX
VCP
BOOST
LNB
2
LNB_OUT
VCC_LNBA
DWAA3
CWAA8
CWAA7
RWAA7
CWAA9
STI8036
[2] LNB_EN
[2] DISEQC
[2] LNB_SEL
ON/OFF
IN22K
LNB_H/V
RWAA4
RWAA5
RWAA6
6
8
7
EN
TONE
SEL
GND
9
RWAA1
RWAA2
RWAA3